ARKA

INTRODUCTION

PROFILE

Founded in 1996, FUZHOU ARTHAS FLUID EQUIPMENT TECHNOLOGY CO.,LTD has started its operation as a small production unit of plastic irrigation fittings in 90's in Fuzhou, China. With relentless focus on Research & Development, skilled and experienced personnel coupled with continuous implementations in technology and infratructure.



ARTHAS today has enlarged the scale of company who has a modern, vertically integrated production facilities covering a surface of over 30,000 ㎡ which including molding, plastic injection, metal stamping, electronic appliances and assembling lines with the production capacity of 1,200,000 annual ouputs for filters, valves sprayers , drip irrigation pipes, mist sprayers as well as filtration systems, which making it one of the leading industries in the sector, providing high quality, cutting-edge water treatments and water filtration systems.

During the past few decades, we have grown up one of the top Irrigation System provider in China and have didicated ourselves to developing and manufacturing the qualified agricultural and commercial irrigation products.

Now, as a reliable manufacturer in this irrigation market, we supply worldwide with our brand name "**ARKA**". For customer satisfaction on service and product quality which we are providing, we have obtained certificate of ISO 9001 on quality assurance and qualified management system, as well as other safty certificates such as CE, GS, ROHS, REACH, UL and so on, our products have been designed, developed and manufactured in accordance with strict specifications. Until now, we have obtained more than 30 patents like industrial design, utility model, technology invention and so on.

We always abide by the value of "innovation & creation, customer orientation, dynamic & entusiasm, integrity and honesty". We apply the core competence "scientific and technological innovation" to make contribution to water conservation and industrial water recycling etc. We are devote to bring a better environment for the earth by our continuous efforts.

AGRICULTURE IRRIGATION

Provide clean water supply and complete protection for various agricultural & garden irrigation equipment (sprayers , drip irrigation pipes, mist sprayers, etc.)

URBAN LANDSCAPE IRRIGATION

Provide clean recycling for urban public parks residential garden with cost efficient & energy saving solutions.

GOLF COURSE IRRIGATION

Provide clean water supply and complete protection for golf course fairways and green irrigation equipment (sprayers, drip irrigation pipes, mist sprayers, etc.)

WATER TREATMENT

Provide the first step filteration for water treatment







ARTHAS provides unique and comprehensive water filtration solutions to any agricultural and industrial application. Under ARKA brand, there is a wide range of filters coming out of different filtering elements and materials. Furthermore, ARKA irrigation filters are in accuracy levels and different flow rates. Meanwhile, automatic backwash filtration technology achieves simultaneous and continuous filtered water supply while discharging.

DISC FILTER:

Y type disc filters TX type disc filters
T type disc filters AGL disc filters
H type disc filters Automatic disc filters

SCREEN FILTER:

Y type screen filters TX type screen filters
T type screen filters H type screen filters
Sprial clean semi-automatic screen filters
Automatic backwash screen filter system

FILTERATION SYSTEM



DISC FILTER



SCREEN FILTER



FILTERATION SYSTEM



- *Maximum accuracy and reliability. Micron-precise, high-efficiency filteration*
- *Interchangeable filter elements for a wide range of flow rate*

DISC FILTER

DISC FILTER

UNIQUE TECHNOLOGY

ARKA disc filter focused on multiple filtration grades, high effiency and large volume filtration advantage. We adopted Grooved Disc Design which is a combination of surface filtration and depth filtration . The discs are in a fully compressed state, the upper disc is attached to the lower disc and the grooves between the faces intersect together to form an infinite number of intercepting holes. When the water flows through, some larger particle impurities in the water are intercepted on the outer surface of the disc. The water flows into the disc filter to form the filtration of the water which reach a high effective filtration.

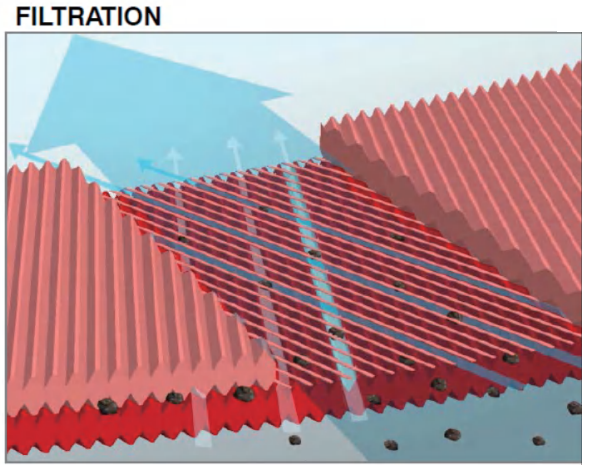

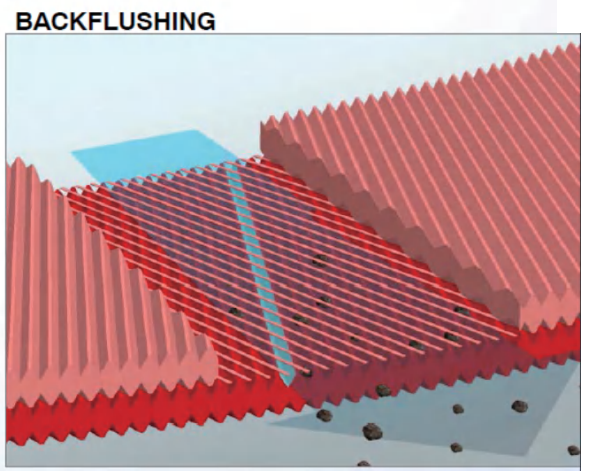

THE FILTRATION GRADE

ARKA disc filter colorful & thin polypropylene discs with multiple filtration grades and provide various filters with flow rates & grade (20~400 micron) to satisfy different application needs.



400 micron (40 mesh)

200 micron (80 mesh)

130 micron (120 mesh)

100 micron (150 mesh)

50 micron (200 mesh)

20 micron (300 mesh)

Y TYPE DISC FILTERS

The well designed structure makes it easy to clean and can be easily installed in a narrow space. Built-in pressure pipeline, Y type disc filter will efficiently filter out particles.



TYPICAL APPLICATION

Applied to low flow rate water filtering for household, agriculture irrigation, municipal garden irrigation.

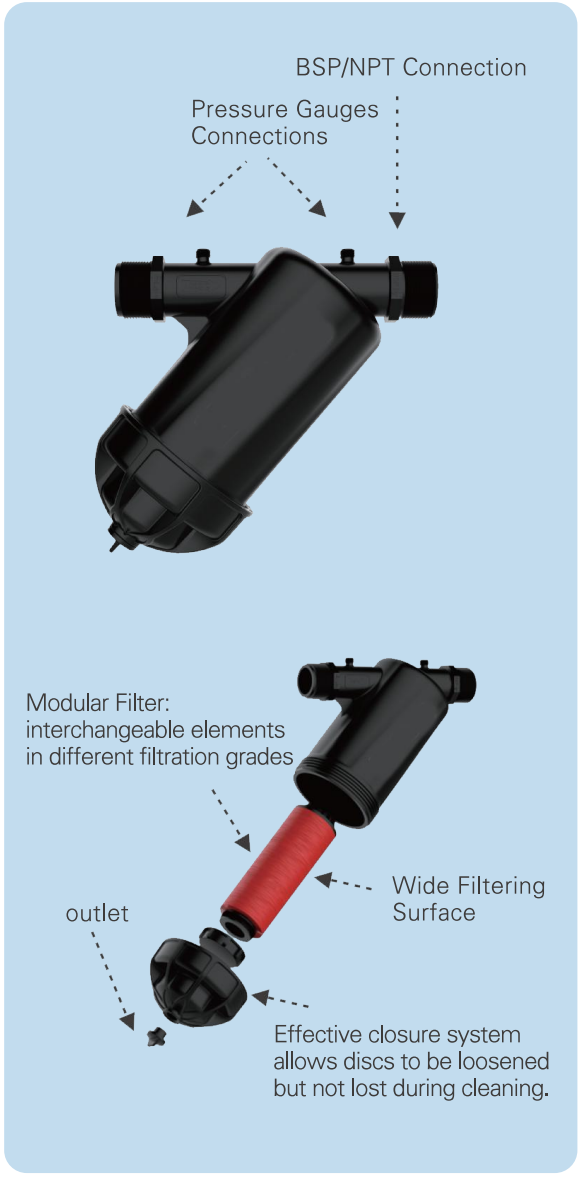

FEATURE & ADVANTAGE

- Manual cleaning
- Compact structure available in narrow space
- Threaded closure system, easy and safe
- Innovative depth filter traps design retains large amounts of solids
- Resistant to chemical products
- Easy installation, easy maintenance
- Auxiliary connection for drain & pressure
- Preset 2 ports for connection pressure gauge
- Gasket in the lid of the filter

HEAD LOSS

Y TYPE FILTER HEAD LOSS(130 micron/120mesh)

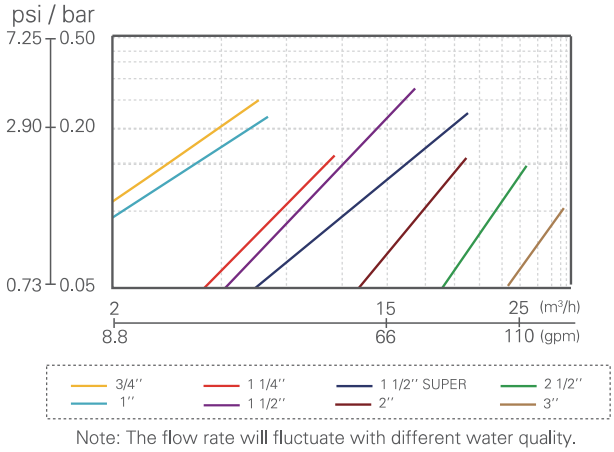

Note: The flow rate will fluctuate with different water quality.

MODEL & SPECIFICATION


F25YD


F25YD-N


F32YD


F32YD-N


F40YD


F50YD


F63YD


F75YD


F90YD

MODEL	CONNECTIONS BSP/NPT	FILTRATION GRADES (mesh)	MAX FLOW (m^3/h)	WORKING PRESSURE (bar)	FILTERING SURFACE (cm^2)	WEIGHTS (kg)
F25YD	3/4”	120	5	8	180	0.39
F25YD-N	3/4”	120	5	8	195	0.35
F32YD	1”	120	6	8	180	0.39
F32YD-N	1”	120	6	8	195	0.35
F40YD	1-1/4”	40/80/120/150	10	8	300	0.96
F50YD	1-1/2”	40/80/120/150	14	8	300	0.96
F63YD	2”	40/80/120/150	25	8	525	1.36
F75YD	2-1/2”	40/80/120	30	8	600	2.60
F90YD	3”	40/80/120	35	8	600	2.70

DIMENSION

MODEL	H (mm)	W (mm)	D (mm)
F25YD	173	176	93
F25YD-N	173	192	83
F32YD	173	176	93
F32YD-N	173	192	83
F40YD	230	250	120
F50YD	230	250	120
F63YD	260	290	140
F75YD	330	360	168
F90YD	330	360	168

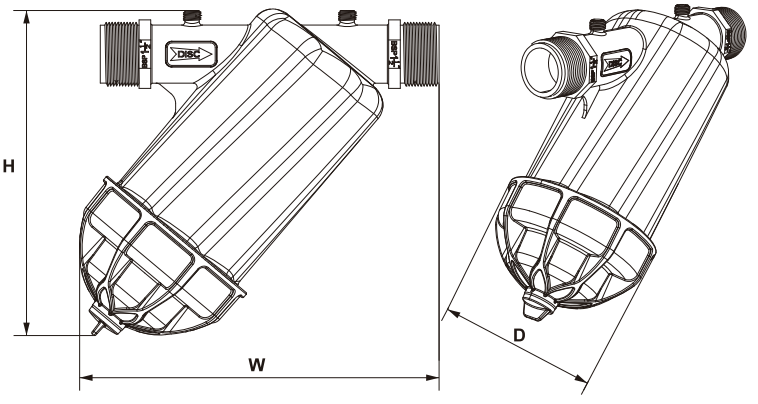

TX TYPE DISC FILTERS

TX type disc filters are simple cleaning with the well-designed structure, which offers a good quality filter for low flow filtration.



TYPICAL APPLICATION

Applied to low flow rate water filtering for household, agriculture irrigation, municipal garden irrigation.

HEAD LOSS

TX TYPE FILTER HEAD LOSS(130 micron/ 120mesh)

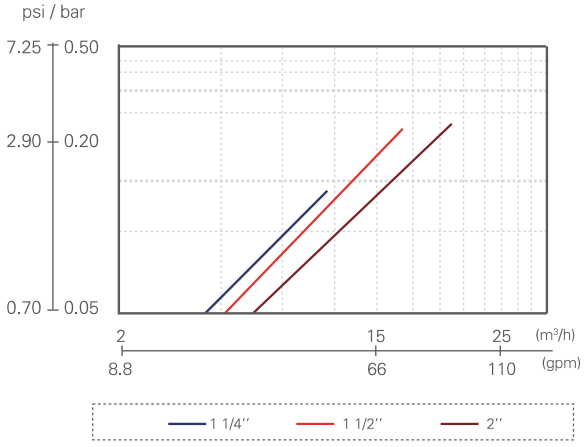

Note: The flow rate will fluctuate with different water quality.

FEATURE & ADVANTAGE

- ✓ Manual cleaning
- ✓ Compact structure available in narrow space
- ✓ Threaded closure system, easy and safe
- ✓ Innovative depth filter traps design
- ✓ retains large amounts of solids
- ✓ Resistant to chemical products
- ✓ Easy installation, easy maintenance
- ✓ Auxiliary connection for drain & pressure
- ✓ Preset 2 ports for connection pressure gauge
- ✓ Gasket in the lid of the

MODEL & SPECIFICATION



F40TD



F50TD



F63TD-X

MODEL	CONNECTIONS BSP/NPT	FILTRATION GRADES (mesh)	MAX FLOW (m^3/h)	WORKING PRESSURE (bar)	FILTERING SURFACE (cm^2)	WEIGHTS (kg)
F40TD	1-1/4"	40/80/120/150	10	8	300	1.01
F50TD	1-1/2"	40/80/120/150	14	8	300	1.01
F63TD-X	2"	40/80/120/150	20	8	300	1.03

DIMENSION

MODEL	H (mm)	W (mm)	D (mm)
F40TD	280	205	139
F50TD	280	205	139
F63TD-X	280	205	139

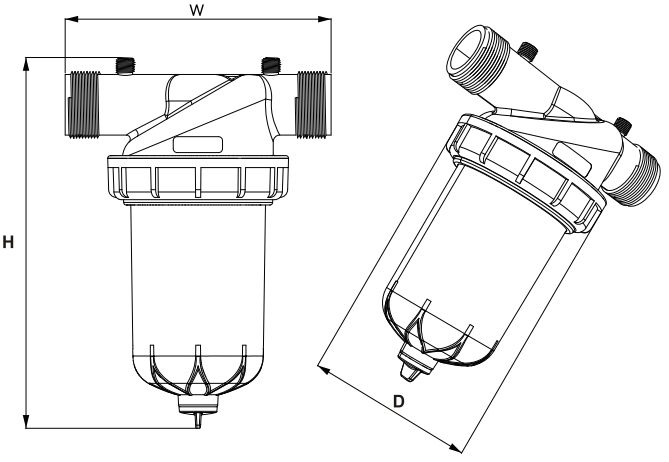

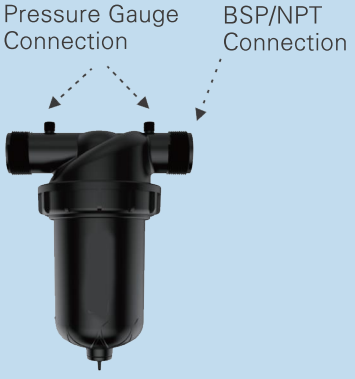

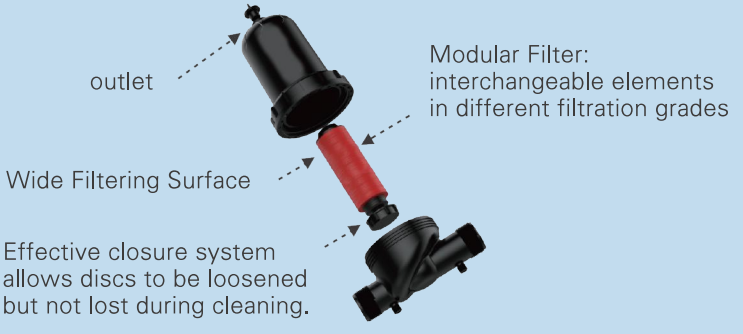

T TYPE DISC FILTERS

Focused on multiple filtration grades, high efficiency and water saving advantages. Keeps the filter clean for longer.

TYPICAL APPLICATION

Applied to medium flow rate water filtering for landscape irrigation, agriculture irrigation, municipal garden irrigation.

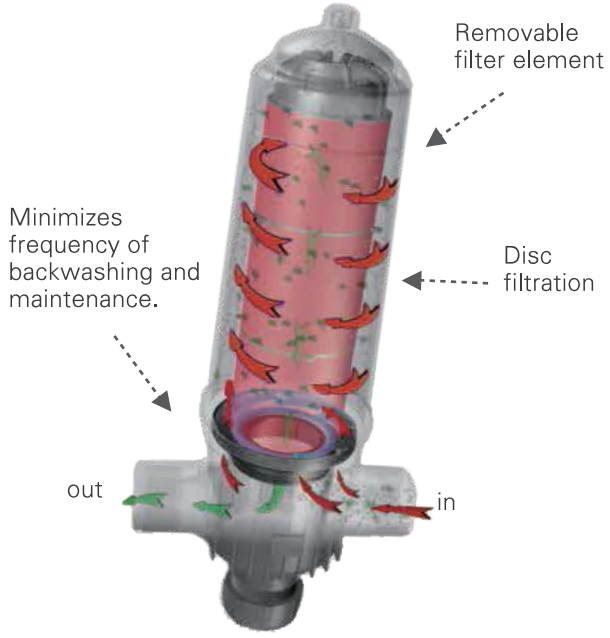

FEATURE & ADVANTAGE

- ✓ Manual cleaning
- ✓ Resistant to chemical products
- ✓ Easy installation, easy maintenance
- ✓ Water and enery saving
- ✓ BSP, NPT or grooved connections for option which can be installed in any position
- ✓ Maximum quality and safty in filtration
- ✓ Robustness. Base and lid manufactured in high quality thermoplastic
- ✓ Threaded tightening nut. High security with easy opening and closing
- ✓ Equipped with pressure gauges intakes
- ✓ Fullfillment of any filtration needs

MODEL & SPECIFICATION



F63TD



F75TD/F90TD-X



F90TD/F63TD-L/F75TD-L

MODEL	CONNECTIONS BSP/NPT	FILTRATION GRADES (mesh)	MAX FLOW (m^3/h)	MAX PRESSURE (bar)	FILTERING SURFACE (cm^2)	WEIGHTS (kg)
F63TD	2”	40/80/120/150/200/300	30	10	1200	6.2
F63TD-L	2”	40/80/120/150/200/300	30	10	1700	8.2
F75TD	2-1/2”	40/80/120/150/200/300	40	10	1200	6.4
F75TD-L	2-1/2”	40/80/120/150/200/300	40	10	1700	8.3
F90TD-X	3”	40/80/120/150/200/300	50	10	1200	6.5
F90TD	3”	40/80/120/150/200/300	50	10	1700	8.3

DIMENSION

MODEL	H (mm)	W (mm)	D (mm)
F63TD	620	320	220
F60TD-L	740	320	220
F75TD	630	320	220
F75TD-L	750	320	220
F90TD-X	630	320	220
F90TD	750	320	220

HEAD LOSS

T TYPE FILTER HEAD LOSS(130 micron/ 120mesh)

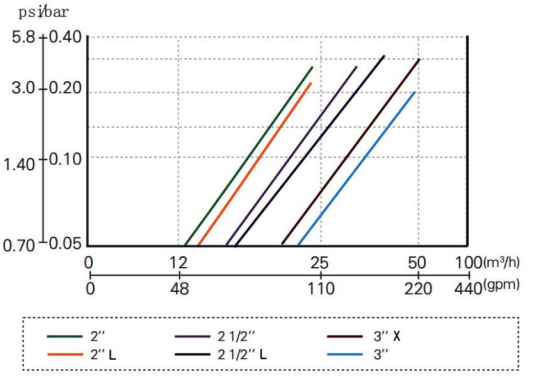

Note: The flow rate will fluctuate with different water quality.

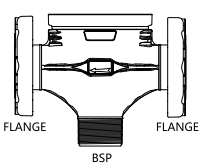

F

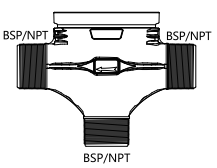

R

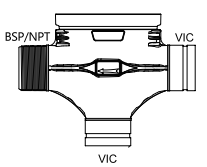

V

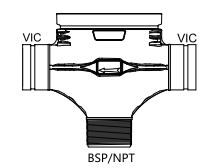

W

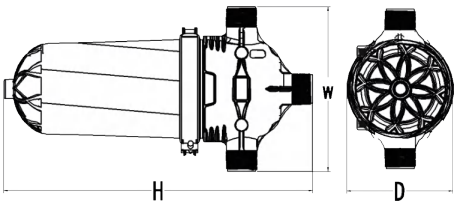

AGL DISC FILTERS

AGL disc filters manufactured in technical plastic with hydraulic design which minimizes the head loss, favors engergy saving and optimizes its performance.

TYPICAL APPLICATION

Applied to medium flow rate water filtering for landscape irrigation, agriculture irrigation, municipal garden irrigation.

HEAD LOSS

AGL FILTER HEAD LOSS(130 micron/ 120mesh)

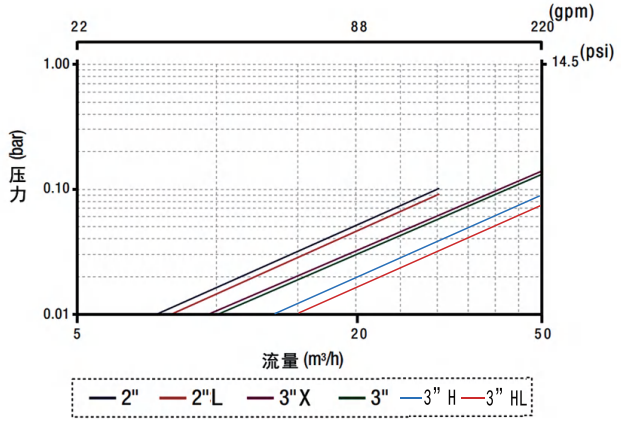

Note: The flow rate will fluctuate with different water quality.

FEATURE & ADVANTAGE

- Manual cleaning
- Low cost with ellectent perfermance
- Resistant to chemical products
- Easy installation, easy maintenance
- Water and enery saving
- BSP, NPT or grooved connections for option which can be installed in any position
- Maximum quality and safty in filtration
- Screw locking system
- Equipped with pressure gauges intakes
- Fullfillment of any filtration needs

MODEL & SPECIFICATION


F63TD-AGL


F63TD-L-AGL


F90TD-X-AGL


F90TD-AGL


F90HD-AGL


F90HDL-AGL

MODEL	CONNECTIONS BSP/NPT	FILTRATION GRADES (mesh)	MAX FLOW (m^3/h)	MAX PRESSURE (bar)	FILTERING SURFACE (cm^2)	WEIGHTS (kg)
F63TD-AGL	2”	40/80/120/150/200/300	30	10	1050	3.6
F63TD-L-AGL	2”	40/80/120/150/200/300	30	10	1660	4.8
F90TD-X-AGL	3”	40/80/120/150/200/300	40	10	1050	4
F90TD-AGL	3”	40/80/120/150/200/300	50	10	1660	5.3
F90HD-AGL	3”	40/80/120/150/200/300	55	10	2100	7
F90HDL-AGL	3”	40/80/120/150/200/300	60	10	3320	9.5

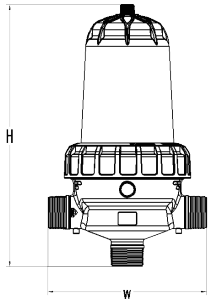

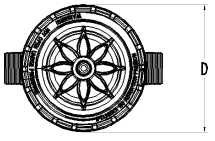



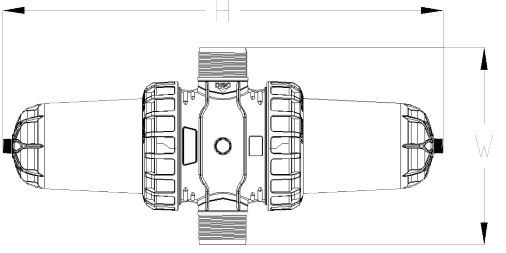

DIMENSION

MODEL	H (mm)	W (mm)	D (mm)
F63TD-AGL	480	292	233
F63TD-L-AGL	630	292	233
F90TD-X-AGL	528	355	233
F90TD-AGL	678	355	233
F90HD-AGL	800	360	233
F90HDL-AGL	1100	360	233

H TYPE DISC FILTERS



Fullfilment of any filtration needs, high efficiency and water saving advantages. The double-bucket design offers a good quality filter for high flow filtration.

TYPICAL APPLICATION

Applied to large flow rate water filtering for landscape irrigation, agriculture irrigation, municipal garden irrigation.

FEATURE & ADVANTAGE

- ✓ Manual cleaning
- ✓ Big inlet allowing high flow filtration
- ✓ Resistant to chemical products
- ✓ Easy installation, easy maintenance
- ✓ Water and enery saving
- ✓ BSP, NPT or grooved connections for option which can be installed in any position
- ✓ Maximum quality and safty in filtration
- ✓ Threaded tightening nut. High security with easy opening and closing
- ✓ Equipped with pressure gauges intakes
- ✓ Fullfillment of any filtration needs

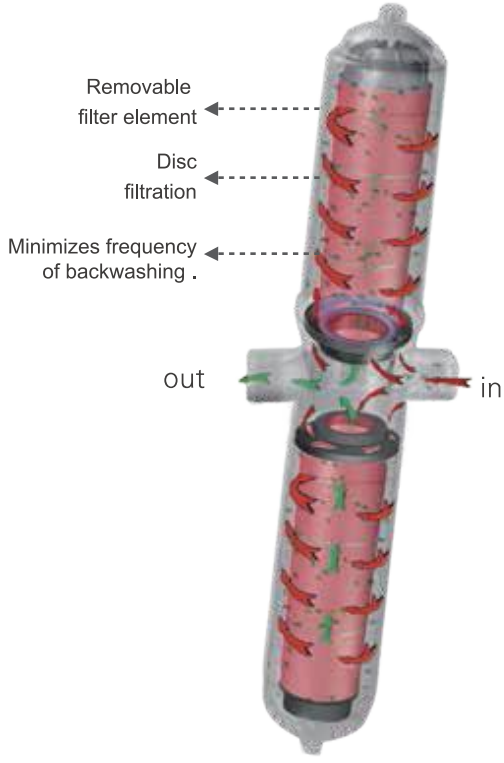

MODEL & SPECIFICATION



F90HD/F110HD



F90HD-L/F110HD-L

MODEL	CONNECTIONS BSP/NPT	FILTRATION GRADES (mesh)	MAX FLOW (m^3/h)	MAX PRESSURE (bar)	FILTERING SURFACE (cm^2)	WEIGHTS (kg)
F90HD	3”	40/80/120/150/200/300	50	10	2400	10.9
F90HD-L	3”	40/80/120/150/200/300	60	10	3400	13.1
F110HD	4”	40/80/120/150/200/300	70	10	2400	11.3
F110HD-L	4”	40/80/120/150/200/300	100	10	3400	13.5

DIMENSION

MODEL	H (mm)	W (mm)	D (mm)
F90HD	940	335	220
F90HD-L	1200	335	220
F110HD	960	340	220
F110HD-L	1220	340	220

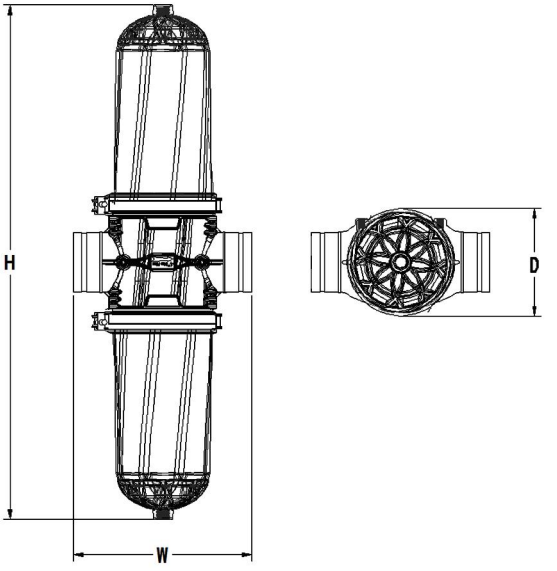

HEAD LOSS

H TYPE FILTER HEAD LOSS(130 micron/ 120mesh)

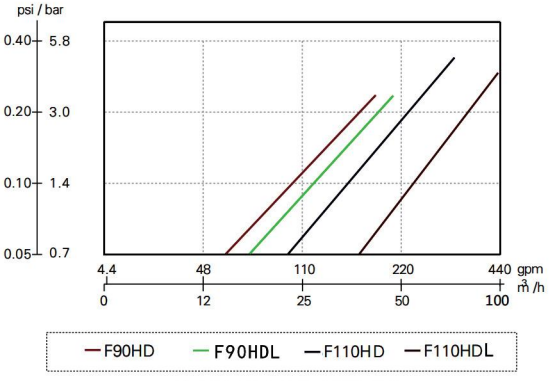

Note: The flow rate will fluctuate with different water quality.

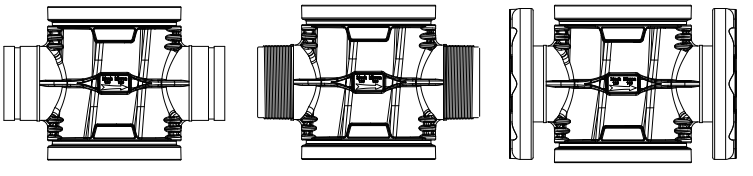

VIC BSP/NPT FLANGE

AUTOMATIC DISC FILTERS

ARKA automatic disc filters that allows to obtain the maximum quality in filtration and minimum energy consumption on each backflushing process. Modular configurations can be designed to customer preference or space availablity. Going with hydraulic backwash valves as well as built-in computer chip for automatic scheduling work, it works as an automatic unattended water filtration system, which ensures continuous water supply while discharging the sewage



EFFECTIVE CLEANING
MINIMUN FLOW&PRESSURE

FEATURE & ADVANTAGE

- Automatic cleaning
- Water and energy saving.
- Multiple filtration grades
- Self-cleaning filtering element
- Modularity, versatility, compatibility
- Compact assembled system for easy transportation and installation
- Manufactured in plastic material
- Easy installation, easy maintenance
- Resistant to chemical products



Filtrotion Phase :

The only route for water passing is through the stacket discs.
The solids are retained on the filter element.





Backflushing Phase :

The filtered water is introduced into the filter in the opposite direction.
Decompression of the stacket discs.
Tangential projection of cleaning water.

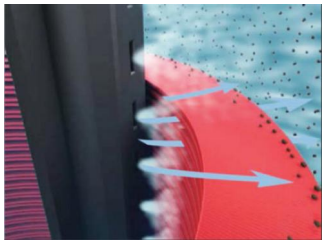

MODEL & SPECIFICATION



F63TDZ



F63TDZ-L/F90TDZ



F90HDZ/F90HDZL/F110HDZL

MODEL	CONNECTIONS BSP/NPT	FILTRATION GRADES (mesh)	MAX FLOW (m^3/h)	MAX PRESSURE (bar)	BACKWASH PRESSURE (bar)	FILTERING SURFACE (cm^2)	WEIGHTS (kg)
F63TDZ	2”	40/80/120/150/200/300	25	10	1.5	1020	7.9
F63TDZ-L	2”	40/80/120/150/200/300	30	10	1.8	1492	9.3
F90TDZ	3”	40/80/120/150/200/300	32	10	1.8	1492	9.4
F90HDZ	3”	40/80/120/150/200/300	50	10	2.0	2040	13.7
F90HDZ-L	3”	40/80/120/150/200/300	55	10	2.0	2984	15.1
F110HDZ	4”	40/80/120/150/200/300	50	10	2.0	2040	13.7
F110HDZ-L	4”	40/80/120/150/200/300	64	10	2.0	2984	15.6

DIMENSION

MODEL	H (mm)	W (mm)	D (mm)
F63TDZ	620	320	220
F63TDZ-L	740	320	220
F90TDZ	750	340	220
F90HDZ	975	340	220
F90HDZ-L	1200	340	220
F110HDZ	980	340	220
F110HDZ-L	1220	340	220

HEAD LOSS

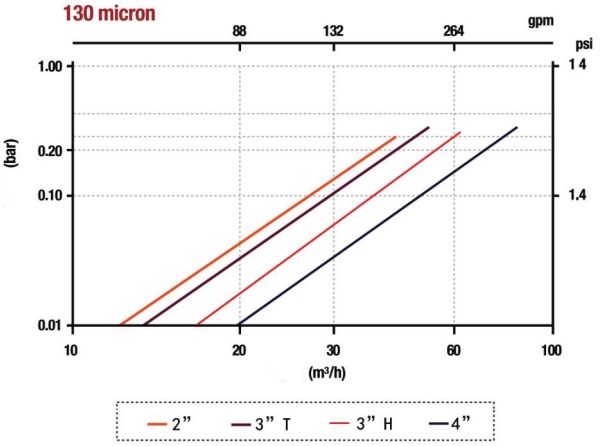

Note: The flow rate will fluctuate with different water quality.

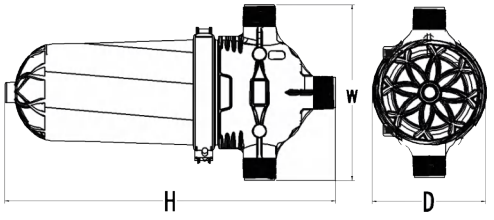

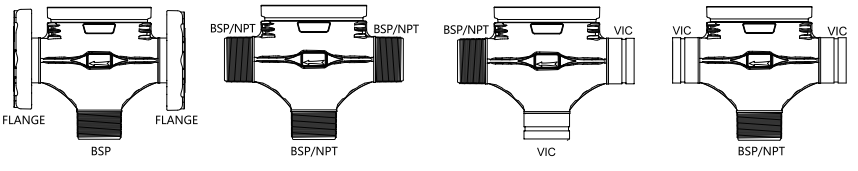



- *Stainless steel screen*
- *Enjoying highly flexible, corrosion, acid and alkaline resistant features*

SCREEN FILTER

SCREEN FILTER

ARKA screen Iter is made of stainless steel mesh and high-strength polypropylene injection molding. The one-piece filter element is strong and durable. The filter screen adopts a unique and innovative weaving technology, and provides a variety of mesh filter elements. Strong wear resistance, corrosion resistance, acid and alkali resistance, simple operation, easy to disassemble the filter element for cleaning or replacement, providing users with the possibility of simple maintenance and cleaning of the filter elements.



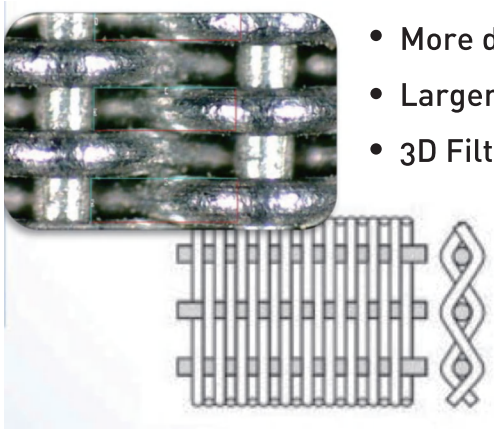

- More dense
- Larger diameter yarns
- 3D Filtration

- MORE RESISTANT SCREEN

THE FILTRATION GRADE

The customer could choose the different filtering element according to the water quality and required filtration grade. The filtration grade is distinguished by different colors as below

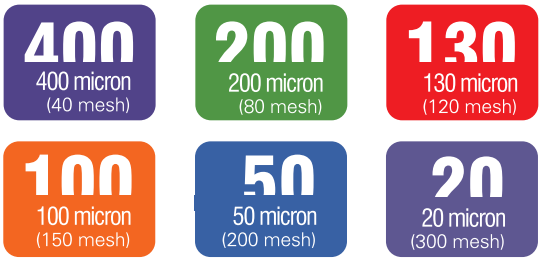

SAFETY

- ✓ Effective cleaning in all the cartridge
- ✓ Effective csuction without touching the screen,avoiding problems of torn
- ✓ Minimum pressure 1.6 bar only
- ✓ Sealing scanner
- ✓ Reduces spending on cleaning
- ✓ Cleaning system protection:long life

MINIMUM FLOW CLEANING
HIGH EFFICIENCY

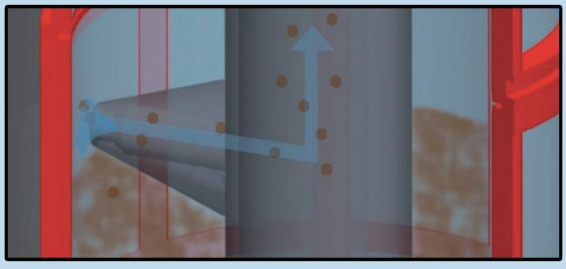

Y TYPE SCREEN FILTERS



Delicate weaving craftsmanship of stainless steel screen with different micron-grade filter screen to meet different needs. Enjoying highly flexible, corrosion, acid and alkaline resistant features. And the compact design can be easily installed in a narrow space.

TYPICAL APPLICATION

Applied to low flow rate water filtering for household, agriculture irrigation, municipal garden irrigation.

FEATURE & ADVANTAGE

- Compact structure available in narrow space
- Threaded closure system, easy and safe
- Durable & stainless steel filter screen with corrosion, acid and alkaline resistant features
- Easy installation, easy maintenance
- Preset 2 ports for connection pressure gauge
- Gasket in the lid of the filter
- Low cost with excellent performance

HEAD LOSS

Y TYPE FILTER HEAD LOSS(130 micron/120mesh)

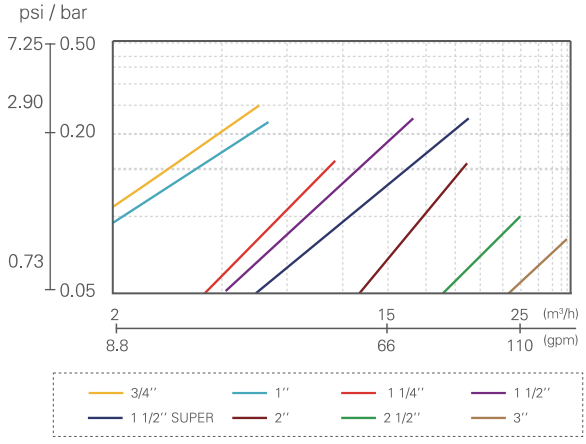

Note: The flow rate will fluctuate with different water quality.

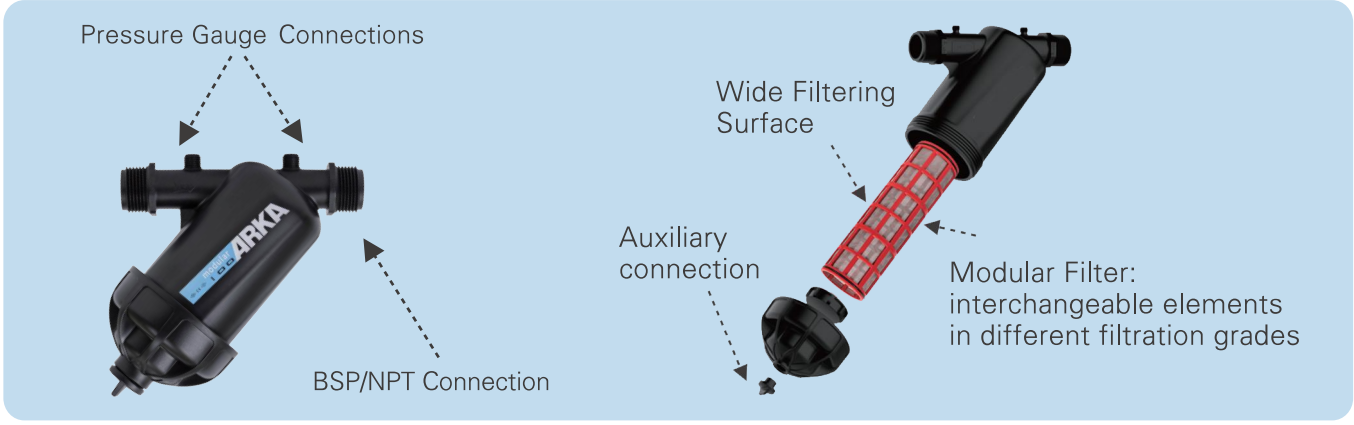

MODEL & SPECIFICATION


F25YS


F25YS-N


F32YS


F32YS-N


F40YS


F50YS


F63YS


F75YS


F90YS

MODEL	CONNECTIONS BSP/NPT	FILTRATION GRADES (mesh)	MAX FLOW (m^3/h)	WORKING PRESSURE (bar)	FILTERING SURFACE (cm^2)	WEIGHTS (kg)
F25YS	3/4”	80/120	5	8	160	0.30
F25YS-N	3/4”	120	5	8	190	0.25
F32YS	1”	80/120	6	8	160	0.30
F32YS-N	1”	120	6	8	190	0.25
F40YS	1-1/4”	80/120	10	8	265	0.71
F50YS	1-1/2”	80/120	14	8	265	0.72
F63YS	2”	80/120	25	8	485	0.98
F75YS	2-1/2”	80/120	30	8	565	2.03
F90YS	3”	80/120	35	8	565	2.10

DIMENSION

MODEL	H (mm)	W (mm)	D (mm)
F25YS	173	176	93
F25YS-N	173	192	83
F32YS	173	176	93
F32YS-N	173	192	83
F40YS	230	250	120
F50YS	230	250	120
F63YS	260	290	140
F75YS	330	360	168
F90YS	330	360	168

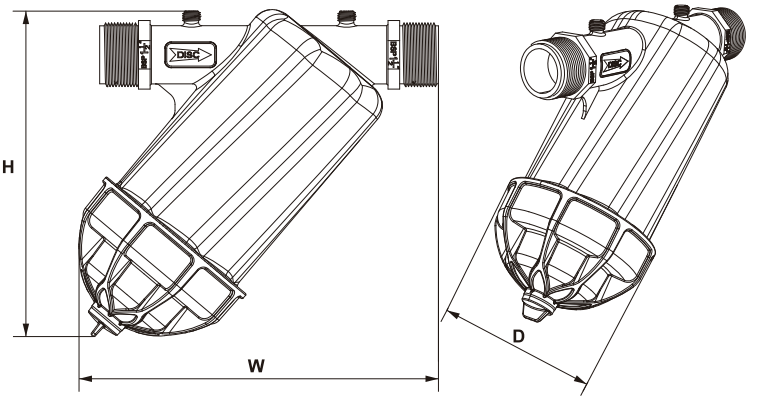

TX TYPE SCREEN FILTERS

Delicate weaving craftsmanship of stainless steel screen with different micron-grade filter screen to meet different needs. Enjoying highly flexible, corrosion, acid and alkaline resistant features. And the compact design can be easily installed in a narrow space.

TYPICAL APPLICATION

Applied to low flow rate water filtering for household, agriculture irrigation, municipal garden and landscape irrigation.



FEATURE & ADVANTAGE

- Compact structure available in narrow space
- Threaded closure system, easy and safe
- Durable & stainless steel filter screen with corrosion, acid and alkaline resistant features
- Easy installation, easy maintenance;
- Preset 2 ports for connection pressure gauge
- Gasket in the lid of the filter

MODEL & SPECIFICATION



F40TS



F50TS



F63TS-X

MODEL	CONNECTIONS BSP/NPT	FILTRATION GRADES (mesh)	MAX FLOW (m^3/h)	WORKING PRESSURE (bar)	FILTERING SURFACE (cm^2)	WEIGHTS (kg)
F40TS	1-1/4”	80/120	10	8	265	0.81
F50TS	1-1/2”	80/120	14	8	265	0.83
F63TS-X	2”	80/120	20	8	265	0.85

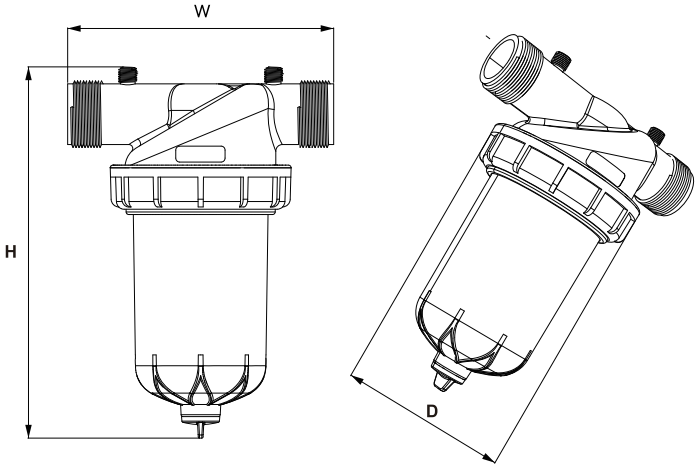

DIMENSION

MODEL	H (mm)	W (mm)	D (mm)
F40TS	280	205	139
F50TS	280	205	139
F63TS-X	280	205	139

HEAD LOSS

TX TYPE FILTER HEAD LOSS(130 micron/ 120mesh)

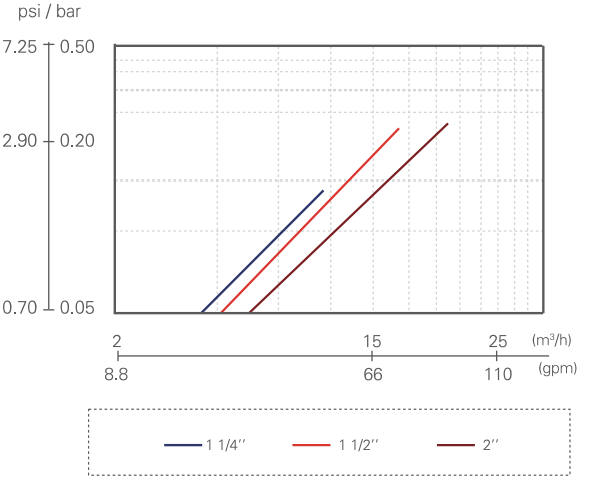

Note: The flow rate will fluctuate with different water quality.

T TYPE SCREEN FILTERS

Multiple filtration grades, high efficiency and water saving advantages. Delicate weaving craftsmanship of stainless steel screen with different micron-grade filter screen to meet different needs which enjoying highly flexible, corrosion, acid and alkaline resistant features.

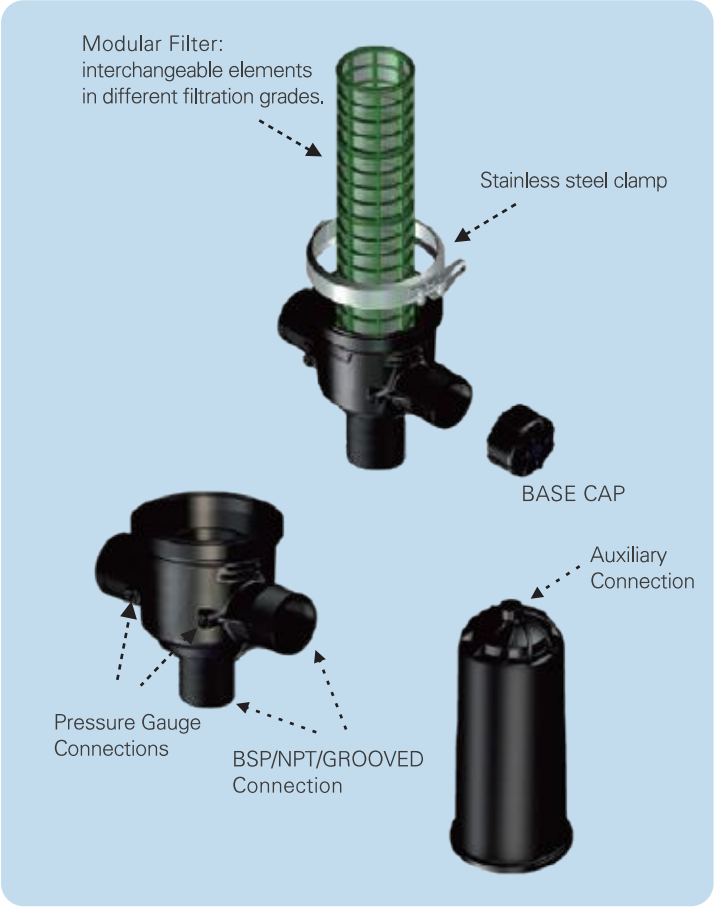

TYPICAL APPLICATION

Applied to medium flow rate water filtering for landscape irrigation, agriculture irrigation, municipal garden and landscape irrigation.

FEATURE & ADVANTAGE

- Easy installation, easy maintenance
- Durable & stainless steel filter screen with corrosion, acid and alkaline resistant features
- Water and enery saving
- BSP, NPT or grooved connections for option which can be installed in any position
- Maximum quality and safty in filtration
- Robustness. Base and lid manufactured in high quality thermoplastic
- Threaded tightening nut. High security with easy opening and closing
- Fullfillment of any filtration needs

MODEL & SPECIFICATION



F63TS



F75TS/F90TS-X



F90TS/F63TS-L/F75TS-L

MODEL	CONNECTIONS BSP/NPT	FILTRATION GRADES (mesh)	MAX FLOW (m^3/h)	MAX PRESSURE (bar)	FILTERING SURFACE (cm^2)	WEIGHTS (kg)
F63TS	2”	40/80/120/150/200/300	30	10	1200	4.8
F63TS-L	2”	40/80/120/150/200/300	30	10	1700	5.3
F75TS	2-1/2”	40/80/120/150/200/300	40	10	1200	4.9
F75TS-L	2-1/2”	40/80/120/150/200/300	40	10	1700	5.5
F90TS-X	3”	40/80/120/150/200/300	50	10	1200	5.1
F90TS	3”	40/80/120/150/200/300	50	10	1700	5.8

DIMENSION

MODEL	H (mm)	W (mm)	D (mm)
F63TS	620	320	220
F60TS-L	740	320	220
F75TS	630	320	220
F75TS-L	750	320	220
F90TS-X	630	340	220
F90TS	750	340	220

HEAD LOSS

T TYPE FILTER HEAD LOSS(130 micron/ 120mesh)

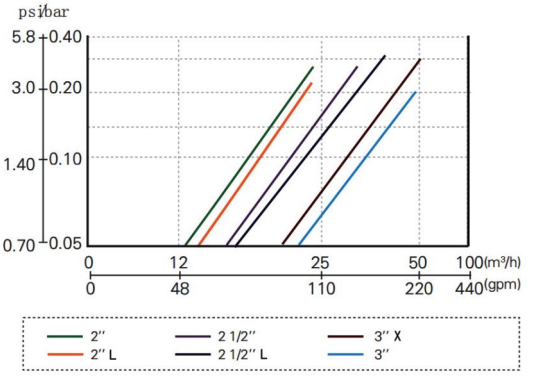

Note: The flow rate will fluctuate with different water quality.

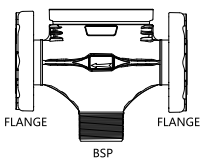

F

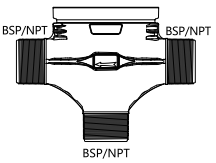

R

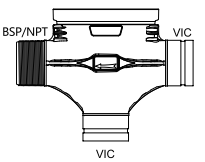

V

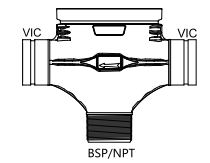

W

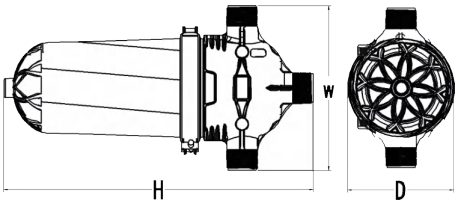

H TYPE SCREEN FILTERS

Well-designed structure for high flow filtration. Multiple filtration grades, high efficiency and water saving. Delicate weaving craftsmanship of stainless steel screen with different micron-grade filter screen to meet different needs which enjoying highly flexible, corrosion, acid and alkaline resistant features.



TYPICAL APPLICATION

Applied to large flow rate water filtering for landscape irrigation, agriculture irrigation, municipal garden irrigation.

FEATURE & ADVANTAGE

- Easy installation, easy maintenance
- Durable & stainless steel filter screen with corrosion, acid and alkaline resistant features
- Water and enery saving
- BSP, NPT or grooved connections for option which can be installed in any position
- Maximum quality and safty in filtration
- Robustness. Base and lid manufactured in high quality thermoplastic
- Threaded tightening nut. High security with easy opening and closing
- Fullfillment of any filtration needs

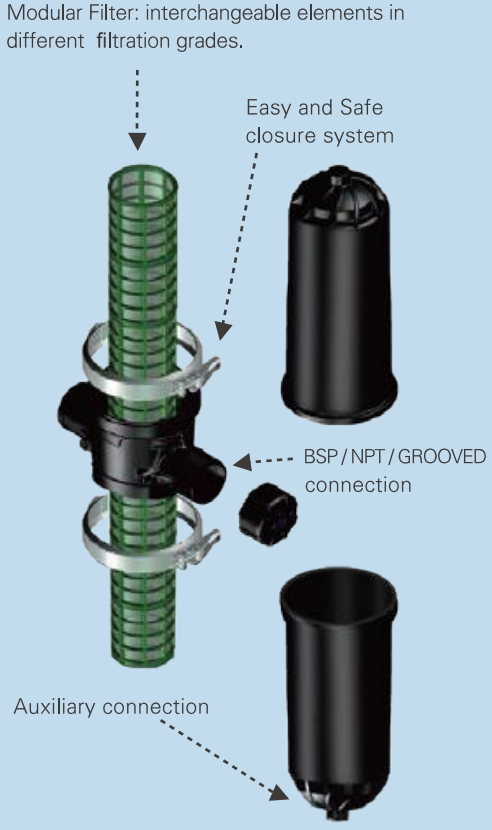

MODEL & SPECIFICATION



F90HS/F110HS



F90HS-L/F110HS-L

MODEL	CONNECTIONS BSP/NPT	FILTRATION GRADES (mesh)	MAX FLOW (m^3/h)	MAX PRESSURE (bar)	FILTERING SURFACE (cm^2)	WEIGHTS (kg)
F90HS	3”	80/120	50	10	1630	7.8
F90HS-L	3”	80/120	60	10	2174	9.2
F110HS	4”	80/120	70	10	1630	8.2
F110HS-L	4”	80/120	100	10	2174	9.6

DIMENSION

MODEL	H (mm)	W (mm)	D (mm)
F90HS	940	335	220
F90HS-L	1200	335	220
F110HS	960	340	220
F110HS-L	1220	340	220

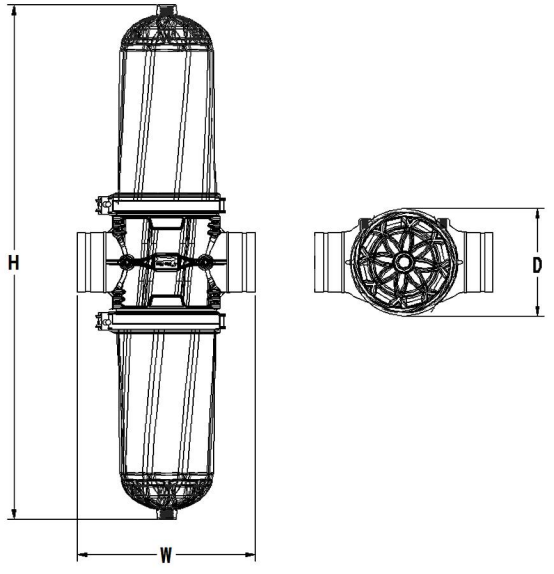

HEAD LOSS

H TYPE FILTER HEAD LOSS(130 micron/ 120mesh)

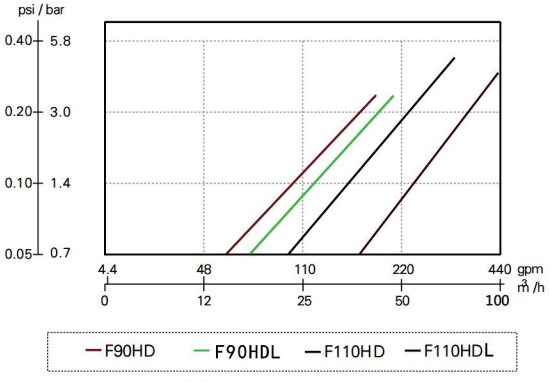

Note: The flow rate will fluctuate with different water quality.

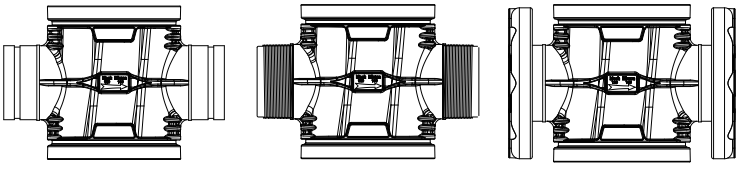

VIC BSP/NPT FLANGE

SPRIAL CLEAN SEMI-AUTOMATIC SCREEN FILTER

Low maintenance and optimum safty in filteration and on its wide filtering surface. Its special design allows an easy and quick cleaning, without disassembling the filter or stopping the installation.

TECHNOLOGY

ARKA SPRIAL CLEAN semi-automatic screen filter has a wide surface screen filtering element, and nozzles are specially designed to remove the particles retained during the filtration process. The rotatory movement of the handle allows the nozzles with a spiral movement, scan the 100% of the screen, sucking the particles and expelling it through the drainage, with little water consumption.



HEAD LOSS

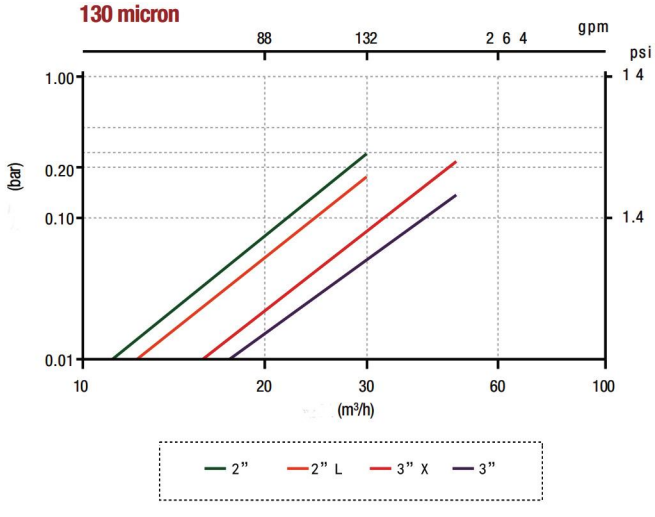

Note: The flow rate will fluctuate with different water quality.

FEATURE & ADVANTAGE

- Low mantainance, without tooling
- It is not necessary to stop the supply of water
- Water and energy saving
- The filter is cleaned without disassembling it
- Maximum fitering surface
- Maximum quality and safty in filtration

MODEL & SPECIFICATION



F63SC



F63SC-L



F90SC-X



F90SC

MODEL	CONNECTIONS BSP/NPT	FILTRATION GRADES (mesh)	MAX FLOW (m^3/h)	MAX PRESSURE (bar)	FILTERING SURFACE (cm^2)	WEIGHTS (kg)
F63SC	2”	120	30	10	890	8.3
F63SC-L	2”	120	30	10	1190	10.1
F90SC-X	3”	120	50	10	890	8.5
F90SC	3”	120	50	10	1190	10.45

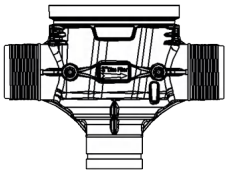

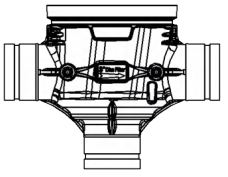

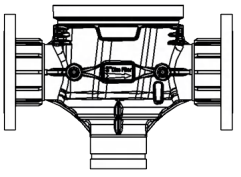

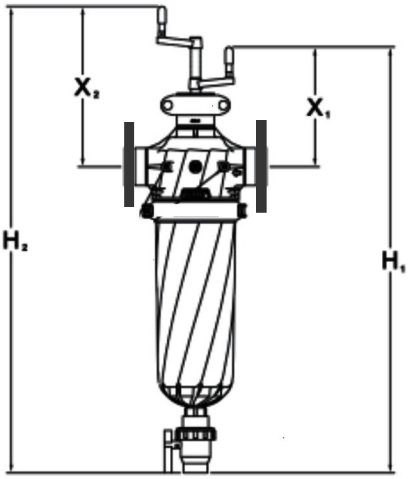

DIMENSION

MODEL	H1 (mm)	H2 (mm)	W (mm)	X1 (mm)	X2 (mm)	D (mm)
F63SC	905	960	345	280	335	220
F63SC-L	1030	1085	345	300	355	220
F90SC-X	920	975	360	280	335	220
F90SC	1045	1100	360	300	355	220

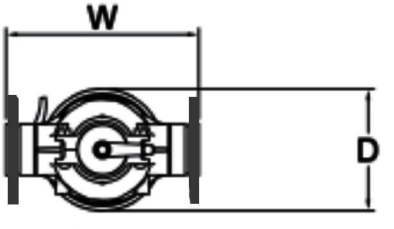

AUTOMATIC BACKWASH SCREEN FILTER SYSTEM

High safety performance: The materials and design of the product ensure the product is durable.

Product features: The filter self-cleaning completely relies on the water pressure inside the system to start clesning,without external pressure.

Low maintenance costs: No tools required,easy operation and high resistance.

Easy to transport and install: The filtration system is well assembled,only need to connect the inlet, outlet and sewage interfaces.

Installation method: use movable flange or bayonet connection, the water inlet and outlet can be rotated 360° to install. Vertical or horizontal installation possible.



WORKING PRINCIPLE

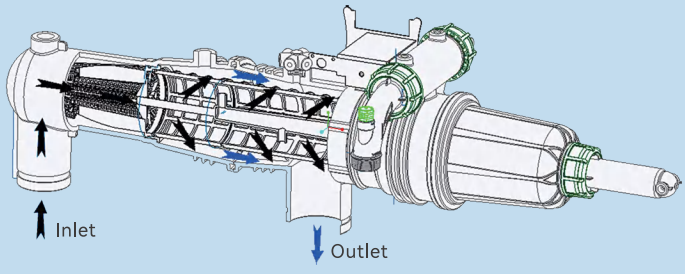

FILTRATION STAGE:

Water into the filter, first through the coarse filter to intercept large particles of impurities,in the inside of the filter, water particles are precision stainless steel filter intercepted, clean water from the outlet outflow.

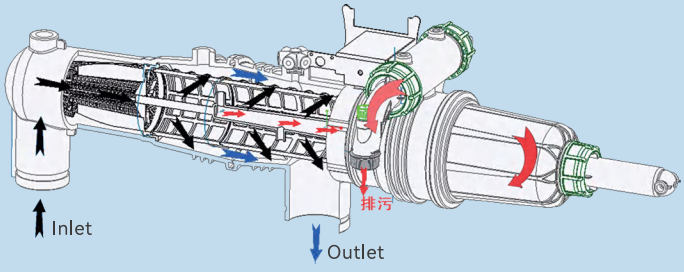

BACKWASH STAGE:

The sewage outlet is opened first, the suction nozzle on the suction shaft rotates at a uniform speed, the suction scan inside the stainless steel filter net produces negative pressure, absorbing the impurities on the inner wall,the spiral reciprocating motion, the impurities are discharged from the screen.

TECHNICAL PARAMETER

	3INCH		4INCH	
Quality of water	200 / 80	130 / 120	200 / 80	130 / 120
Good(m^3/h)	50	48	100	98
Average(m^3/h)	47	45	97	96
Poor(m^3/h)	45	43	95	93
Very Pooer(m^3/h)	43	40	93	90

HEAD LOSS

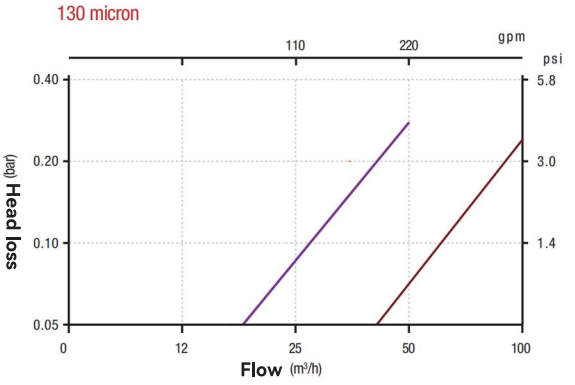

Note: The flow rate will fluctuate with different water quality.

BACKWASH PRESSURE

Backwash Min Working Pressure	1 bar / 14.5psi	Automatic Filter Min Flow	1.5 l/s / 23.8gpm

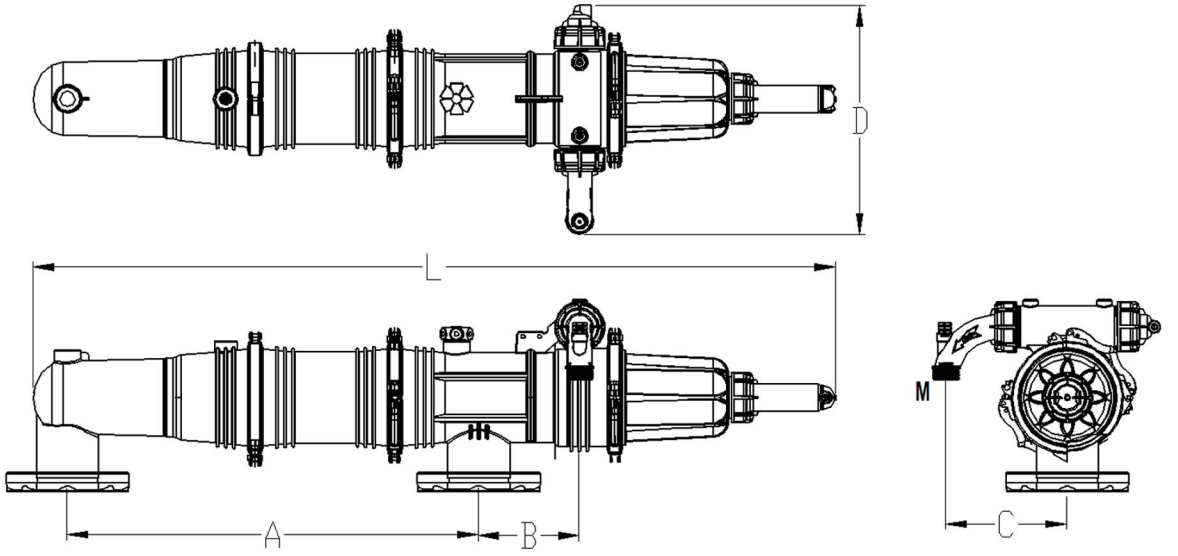

TECHNICAL PARAMETERS AND DIMENSIONS

MODEL	SIZE	FILTRATION GRADES	CONNECTOR	MAX FLOW (m^3/h)	WORKING PRESSURE (bar)	WEIGHTS (kg)
F90ASC	3”	60/80/120	Flange/VIC	50	10	15
F110ASC	4”	60/80/120	Flange/VIC	100	10	18

MODEL	A(mm)	B(mm)	C(mm)	D(mm)	L(mm)	M
F90ASC	500	186	223	422	1223	1-1/2”BSP
F110ASC	758	186	223	422	1530	1-1/2”BSP

VENTURI INJECTOR

Simple construction, easy operation, free power. Meanwhile, ARKA Venturi injector can inject liquid fertilizer and other water solvent into pipe network of irrigation system.

TYPICAL APPLICATION

It is very efficient for small and medium-sized irrigation areas to apply water and fertilizer.

FEATURE & ADVANTAGE

- Low cost, easy operation, stable fertilizer concentration, free extra power.
- Realize fertilizing in proportion to maintain a constant nutrient concentration.
- Realize the integration of irrigation and fertilization and save fertilizer and manpower.
- Built-in check valve to prevent the injection liquid backflow.

MODEL & SPECIFICATION



F32V



F50V



F63V



F90V

MODEL	CONNECTIONS BSP/NPT	MAX FLOW (m^3/h)	TANK CAPACITY (L/H)	MAX PRESSURE (bar)	WEIGHTS (kg)	H(mm)	X(mm)	D(mm)
F32V	1”	9	300	10	0.14	240	74	49
F50V	1-1/2”	16	780	10	0.31	330	95	65
F63V	2”	20	1200	10	0.55	420	98	80
F63V-N	2”	25	1300	10	0.27	350	180	68
F90V	3”	35	2200	10	1.25	490	352	100

ASSEMBLY DIAGRAM AND SPARE PARTS

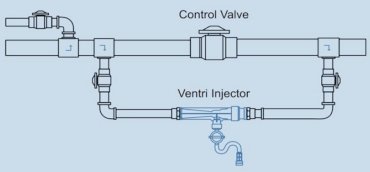



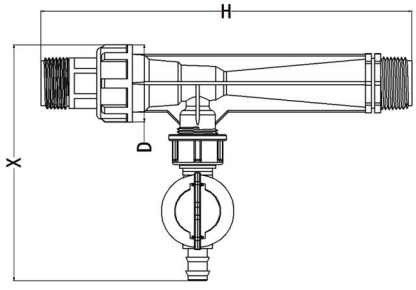

CENTRIFUGAL FILTER

ARKA centrifugal filter separates particles of different densities by gravity and centrifugal outstanding performance for large particles filtration. It can achieve excellent filtering performance working with disc filter or screen filter.

TYPICAL APPLICATION

Well Water Filteration: The filter can quickly filtering the sand and gravels when the water is drawn from deep well by the pump at the beginning.

Irrigation System: If water source comes from rivers and lakes, it is necessary to firstly use centrifugal filter to shake out the sand and gravels as a first-stage filtration process.

Industrial Filteration: For the recycled water, the centrifugal filter operates as primary filtration, works with disc filter or screen filter for more exquisite filteration.

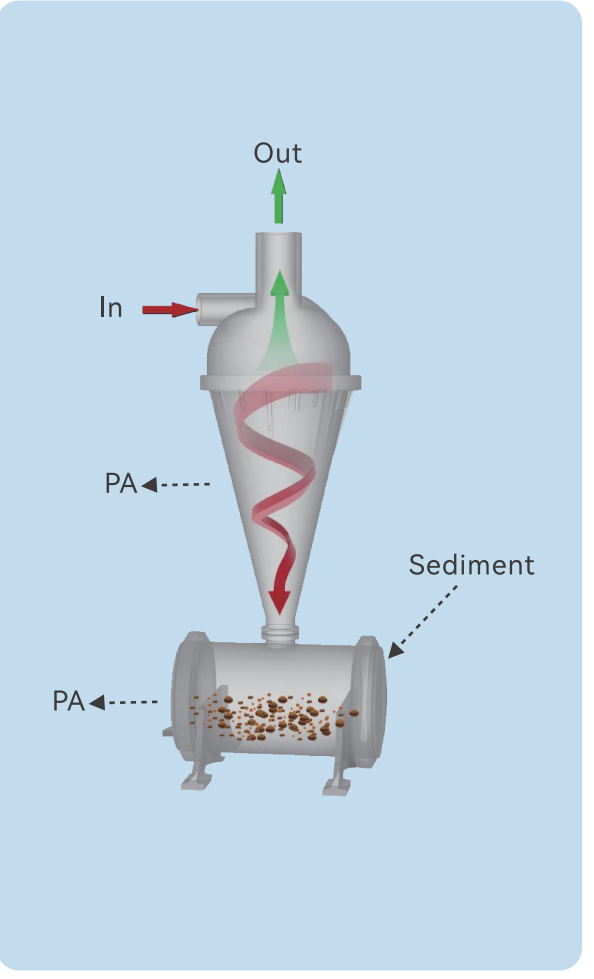

HOW IT WORKS

With unique flow structure design, it creates centrifugal force which will sink the sand or sewage into the bottom collector. The clean water will flow out from outlet. The sand and gravel collector can be cleaned an maintained if necessary.

FEATURE & ADVANTAGE

- Realize the automaton of centrifugal filtration by utilizing the gravity of sand and gravel.
- Durable PA material against chemical products and sand impact.
- Easily dismantled sand collector at the bottom is convenient for maintenance and cleaning.

MODEL & SPECIFICATION



F63LX



F90LX



F110LX

MODEL	CONNECTIONS BSP/NPT	TANK CAPACITY(L)	MAX FLOW (m^3/h)	MAX PRESSURE (bar)	WEIGHTS (kg)
F63LX	2”	16	30	8	13
F90LX	3”	16	50	8	17.5
F110LX	4”	16	100	8	18

FILTERING CHART

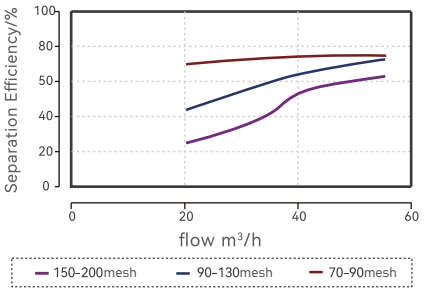

2"centrifugal separation efficiency diagram

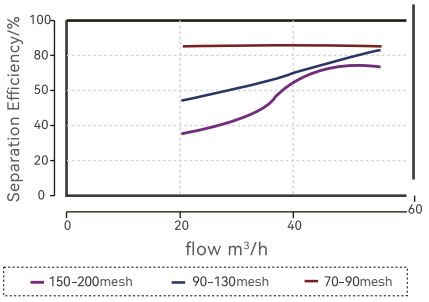

3"centrifugal separation efficiency diagram

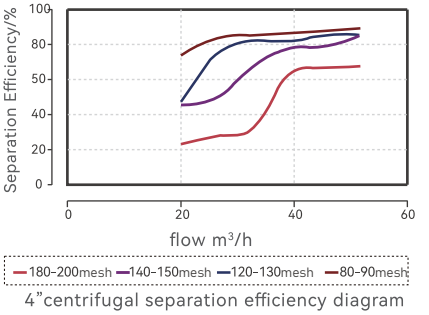

4"centrifugal separation efficiency diagram

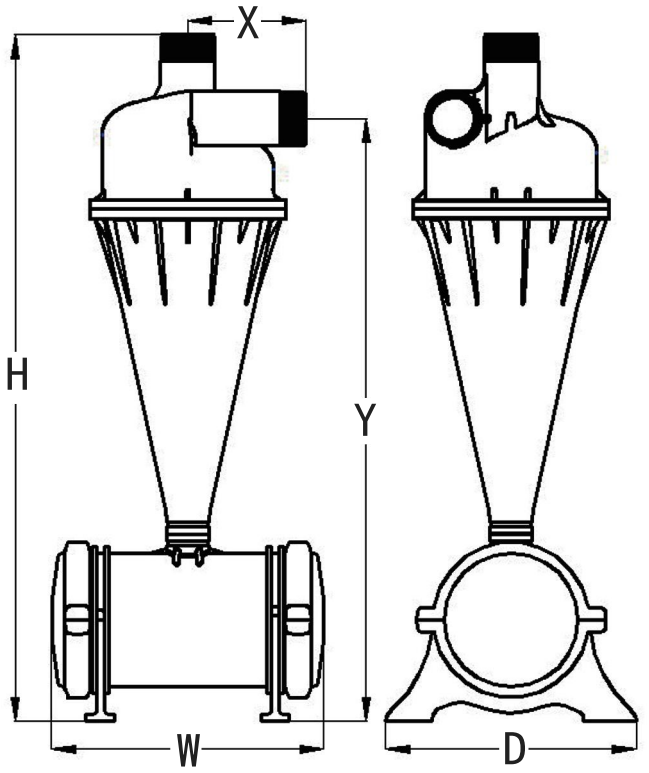

DIMENSION

MODEL	H (mm)	W (mm)	D (mm)	X (mm)	Y (mm)
F63LX	1100	490	430	180	963
F90LX	1220	490	430	205	1070
F110LX	1220	490	430	205	1070

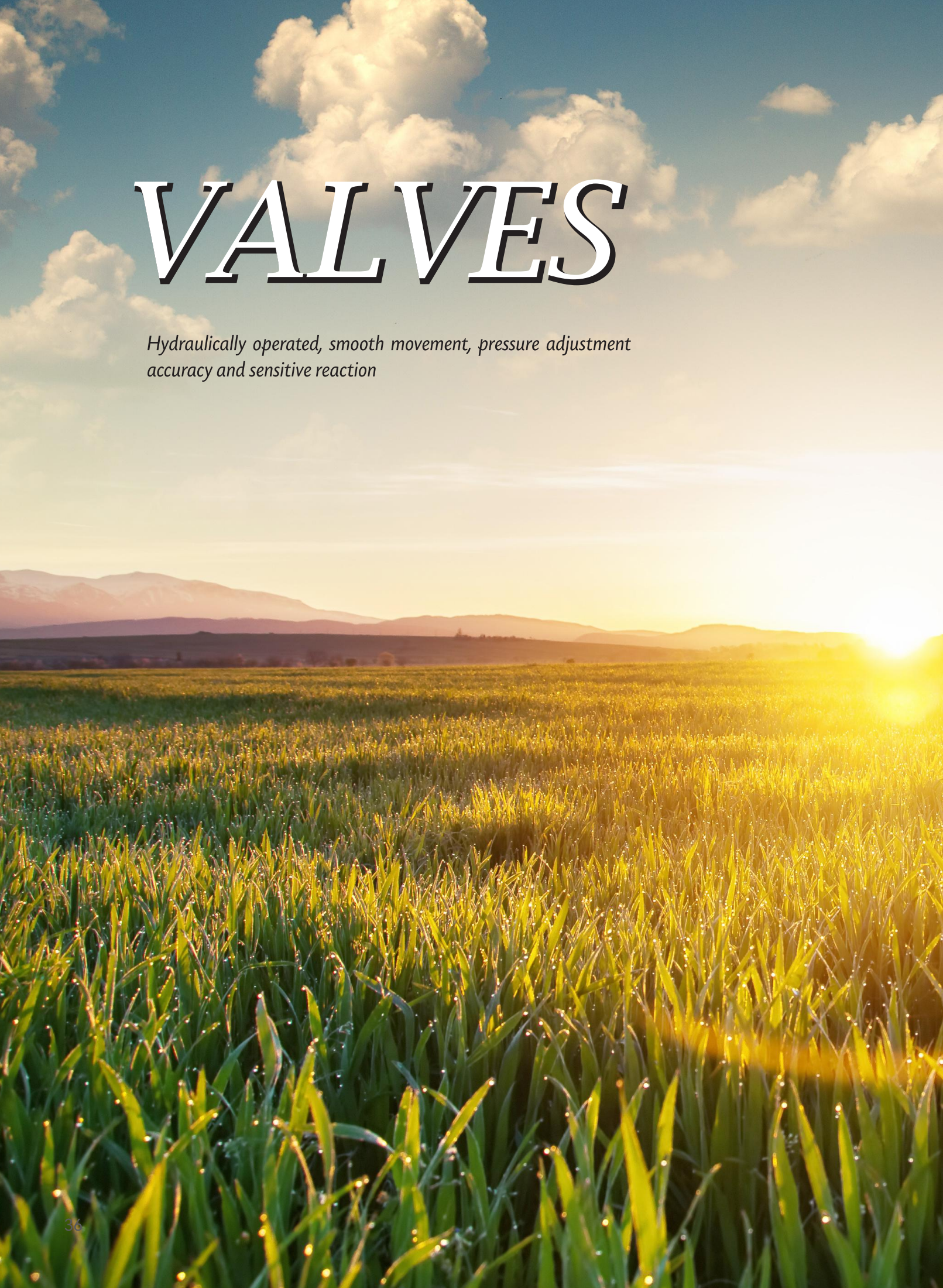

VALVES

Hydraulically operated, smooth movement, pressure adjustment accuracy and sensitive reaction



MANUAL SWITCH VALVE

ARKA series hydraulic control valves is hydraulically operated, diaphragm acruated control valve that movement smooth, pressure adjustment accuracy, reaction sensitive, protected filtration system and irrigation system.





FEATURE & ADVANTAGE

- ✓ Hydraulically Controlled, Normally Closed Valve
  - Line pressure driven
  - Closes upon control failure
  - Amplifies and relays weak remote command
- ✓ Engineered Plastic Valve with Industrial Grade Design
  - Highly durable, chemical and cavitation resistant
  - No internal bolts and nuts
- ✓ High Flow "Y" Valve Body with" Look Through" Design
  - Ultra-high flow capacity, low pressure loss
- ✓ Unitized Flexible Supper Travel(FST) Diaphragm and Guided plug
  - Smooth closing
  - Requires low opening and actuation pressure
  - Prevents diaphragm erosion and distortion
- ✓ Simple In-Line Inspection and Service

TYPICAL APPLICATION

Computerized Irrigation System; Remote Elevated Systems; Turf Irrigation or Buried Pipeline Irrigation; Greenhouse Irrigation; Low Supplied Pressure Irrigation System; Energy Saving Irrigation Systems.



HOW IT WORKS

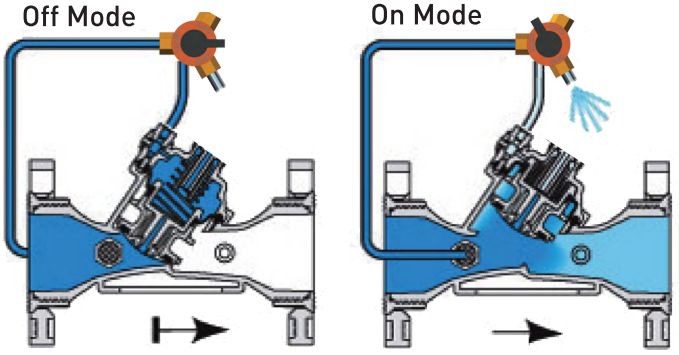

T-SERIES HOW IT WORKS

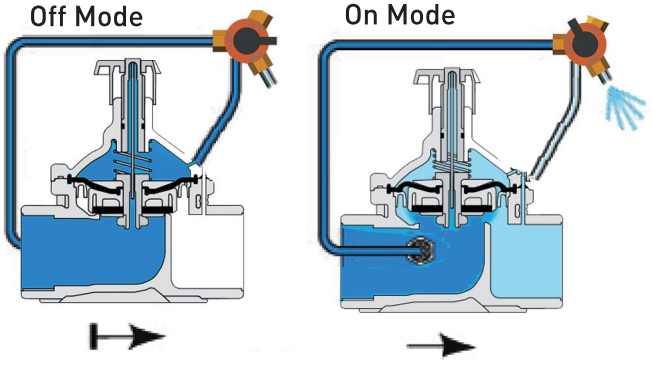

Line pressure is applied to the control chamber. This creates superior closing force that moves the diaphragm assembly to a closed position. Releasing pressure from the control chamber to the atmosphere causes the line pressure under the plug to open the valve.

MODEL & SPECIFICATION

MODEL	CONNECTIONS SIZE	CONNECTIONS	MAX FLOW (m^3/h)	MAX PRESSURE (bar)	WEIGHTS (kg)
AS50HC-T	1.5"×1.5"	BSPT/NPT	13	0.35-10	1.21
AS63HC-T	2"×2"	BSPT/NPT	23	0.35-10	1.3
AS50HC	1.5"×1.5"	BSPT/NPT	15	0.35-10	1.56
AS63HC	2"×2"	BSPT/NPT/VIC	25	0.35-10	1.96
AS90HC	3"×3"	BSPT/NPT/Flanges/VIC	50	0.35-10	2.04 (with Flanges:3.42)
AS110HC	4"×4"	Flanges	100	0.35-10	6
AS160HC	6"×6"	Flanges	150	0.35-10	11.8

DIMENSION

	L (mm)	W (mm)	H (mm)
AS50HC-T	171	126	172
AS63HC-T	171	126	172
AS50HC	226	100	192
AS63HC	230	120	230
AS90HC	320	140	280
AS110HC	350	160	330
AS160HC	436	230	430

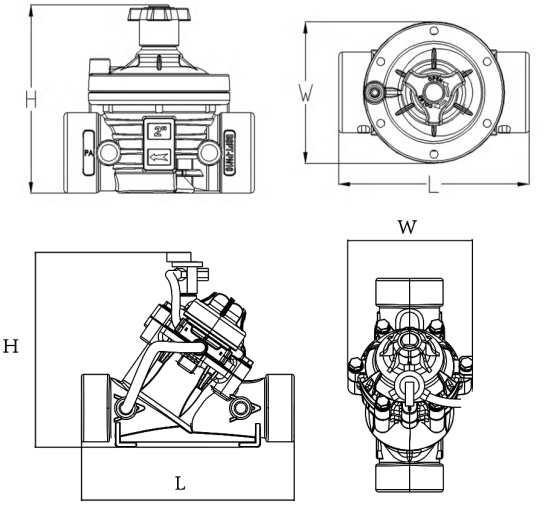

SWITCH VALVE WITH SOLENOID CONTROL

ARKA series hydraulic control valve is hydraulically operated,diaphragm actuated control valve that movement smooth, pressure adjustment accuracy, reaction sensitive, protected filtration system and irrigation system.

This type electric switch valve is hydraulically operated, diaphragm actuated control valve, which opens in response to a remote pressure rise command and shuts in the absence of that command.



FEATURE & ADVANTAGE

- ✓ Hydraulically Controlled, Normally Closed Valve
  - Line pressure driven
  - Closes upon control failure
  - Amplifies and relays weak remote command
- ✓ Engineered Plastic Valve with Industrial Grade Design
  - Highly durable, chemical and cavitation resistant
  - No internal bolts and nuts
- ✓ High Flow "Y" Valve Body with" Look Through" Design
  - Ultra-high flow capacity, low pressure loss
- ✓ Unitized Flexible Supper Travel(FST) Diaphragm and Guided plug
  - Smooth closing
  - Requires low opening and actuation pressure
  - Prevents diaphragm erosion and distortion
- ✓ Simple In-Line Inspection and Service

TYPICAL APPLICATION

Computerized Irrigation Systems; Remote Elevated Systems; Turf Irrigation or Buried Pipeline Irrigation; Greenhouse Irrigation ; Low Supplied Pressure Irrigation System; Energy Saving Irrigation Systems.



HOW IT WORKS

Line pressure［1］ is applied to the Control Chamber［2］ through the held open,3-Way Hydraulic Relay Valve(3W-HRV). This creates superior closing force that moves the Diaphragm ［4］Assembly to a closed position. Upon pressure rise command, the 3W-HRV switches, releasing pressure from the control chamber and thereby opening the Main Valve. The 3W-HRV also features local manual opening and closing.

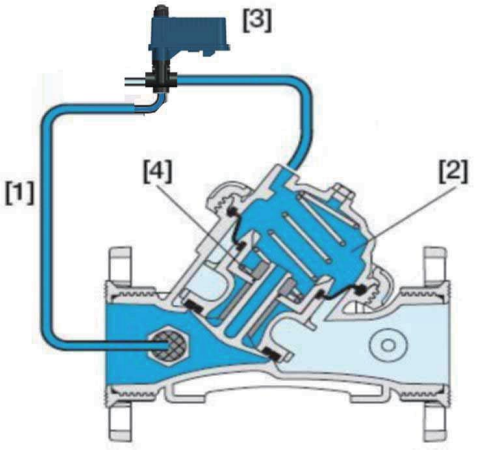

MODEL & SPECIFICATION

MODEL	CONNECTIONS SIZE	CONNECTIONS	VOLTOGE (V)	MAX FLOW (m^3/h)	MAX PRESSURE (bar)	WEIGHTS (kg)
AS25SC	3/4"x3/4"	BSPT/NPT	AC24V/DC24V/DC12V(Latch)	5	0.35-10	0.29
AS32SC	1"×1"	BSPT/NPT	AC24V/DC24V/DC12V(Latch)	5	0.35-10	0.31
AS50SC-T	1.5"×1.5"	BSPT/NPT	AC24V/DC24V/DC12V(Latch)	13	0.35-10	1.2
AS63SC-T	2"×2"	BSPT/NPT	AC24V/DC24V/DC12V(Latch)	23	0.35-10	1.33
AS50SC	1.5"×1.5"	BSPT/NPT	AC24V/DC24V/DC12V(Latch)	15	0.35-10	1.56
AS63SC	2"×2"	BSPT/NPT/VIC	AC24V/DC24V/DC12V(Latch)	25	0.35-10	1.96
AS90SC	3"×3"	BSPT/NPT/VIC/ Flanges	AC24V/DC24V/DC12V(Latch)	50	0.35-10	2.04 (with Flanges:3.42)
AS110SC	4"×4"	Flanges	AC24V/DC24V/DC12V(Latch)	100	0.35-10	6
AS160SC	6"×6"	Flanges	AC24V/DC24V/DC12V(Latch)	150	0.35-10	11.8

DIMENSION

MODEL	L (mm)	W (mm)	H (mm)
AS25SC	110	75	120
AS32SC	110	75	120
AS50SC-T	172	126	171
AS63SC-T	172	126	171
AS50SC	226	120	150
AS63SC	230	150	200
AS90SC	320	160	250
AS110SC	350	170	300
AS160SC	436	240	390

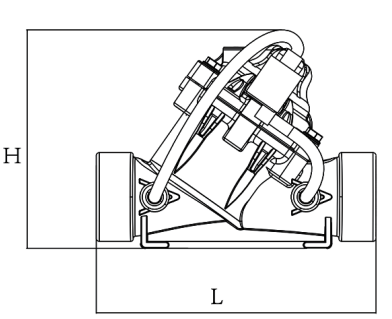

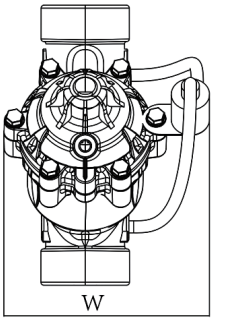

MANUAL PRESSURE REDUCING VALVE

ARKA Pressure Reducing Valve is hydraulically operated, diaphragm actuated control valve that reduces higher upstream pressure to lower constant downstream pressure and opens fully upon line pressure drop.





FEATURE & ADVANTAGE

- ✓ Line Pressure Driven，Hydraulically Controlled
  - Protects downstream systems
  - Opens fully upon line pressure drop
- ✓ Engineered Plastic Valve with Industrial Grade Design
  - Highly durable, chemical and cavitation resistant
  - No internal bolts and nuts
- ✓ Simple In-Line Inspection and Service
- ✓ High Flow "Y" Valve Body with" Look Through" Design
  - Ultra-high flow capacity, low pressure loss
- ✓ Unitized Flexible Supper Travel(FST) Diaphragm and Guided plug
  - Accurate and stable regulation with smooth closing
  - Requires low opening and actuation pressure
  - Prevents diaphragm erosion and distortion

TYPICAL APPLICATION

Pressure Reducing Stations; Systems Subject to Varying Supply Pressure.



HOW IT WORKS

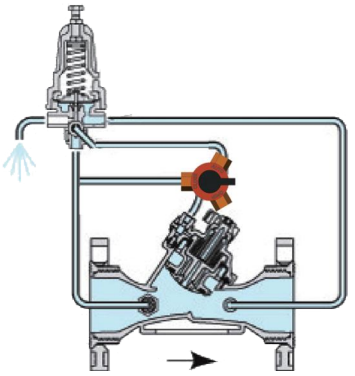

Fully open position

When upstream pressure drops, the pilot blocks the supply pressure port and opens the drain port, venting the control chamber to the atmosphere.This fully opens the valve, minimizing head loss.

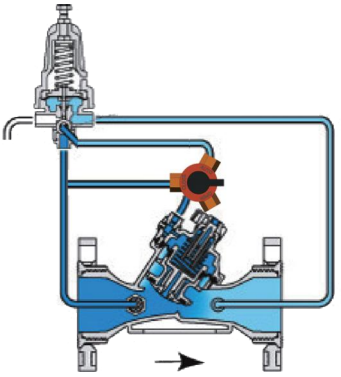

Modulating to close

The pilot switches upon pressurerise, blocking the drain port andopening the supply pressure port.This pressurizes the control chamber,forcing the valve to modulate closed.

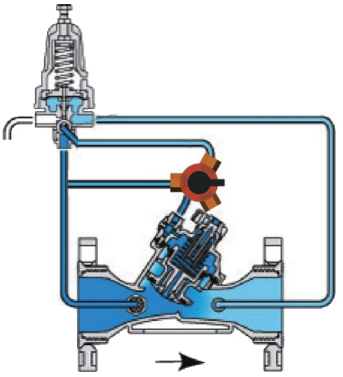

Locked position

When sensed pressure is equal to setting, the pilot blocks both the drain and the supply pressure ports.This locks the pressure in the control chamber, freezing valve opening in its last position until conditions change.

MODEL & SPECIFICATION

MODEL	CONNECTIONS SIZE	CONNECTIONS	MAX FLOW (m^3/h)	MAX PRESSURE (bar)	WEIGHTS (kg)
AS50PR-T	1.5”×1.5”	BSPT/NPT	13	0.35-10	1.55
AS63PR-T	2”×2”	BSPT/NPT	25	0.35-10	1.6
AS50PR	1.5”×1.5”	BSPT/NPT	18	0.35-10	1.86
AS63PR	2”×2”	BSPT/NPT/VIC	30	0.35-10	2.16
AS90PR	3”×3”	BSPT/NPT/Flanges/VIC	50	0.35-10	2.04 (with Flanges:3.42)
AS110PR	4”×4”	Flanges	100	0.35-10	6
AS160PR	6”×6”	Flanges	150	0.35-10	12

DIMENSION

MODEL	L(mm)	W (mm)	H (mm)
AS50PR-T	172	126	171
AS63PR-T	172	126	171
AS50PR	226	120	192
AS63PR	230	150	230
AS90PR	320	160	280
AS110PR	350	170	330
AS160PR	436	240	430

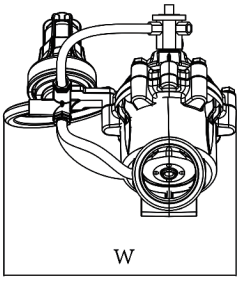

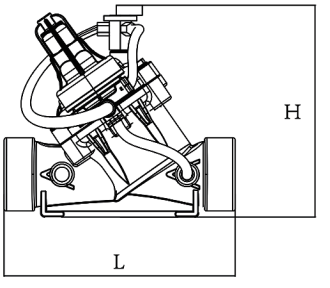

PRESSURE REDUCING VALVE

PRESSURE REDUCING VALVE WITH SOLENOID CONTROL

ARKA Pressure Reducing Valve with solenoid control is hydraulically operated, diaphragm actuated control valve that reduces higher upstream pressure to lower constant downstream pressure and opens fully upon line pressure drop. This model valve either opens or shuts in response to an electric signal.



FEATURE & ADVANTAGE

- ✓ Hydraulic Pressure Control with Solenoid Control Line Pressure Driven。
  - Protects downstream systems
  - Opens fully upon line pressure drop
  - Electrically controlled On/Off
- ✓ Engineered Plastic Valve with Industrial Grade Design
  - Highly durable, chemical and cavitation resistant
  - No internal bolts and nuts
- ✓ High Flow"Y"Valve Body with"Look Through" Design
  - Ultra-high flow capacity, low pressure loss
- ✓ Unitized Flexible Supper Travel(FST) Diaphragm and Guided Plug
  - Accurate and stable regulation with smooth closing
  - Requires low opening and actuation pressure
  - Prevents diaphragm erosion and distortion
- ✓ Simple In-Line Inspection and Service

TYPICAL APPLICATION

Computerized Irrigation Systems;Pressure Reducing Stations; Systems Subject to Varying Supply Pressure;Distribution Centers; Energy Saving Irrigation Systems; Remote and /or Elevated Plots.



HOW IT WORKS

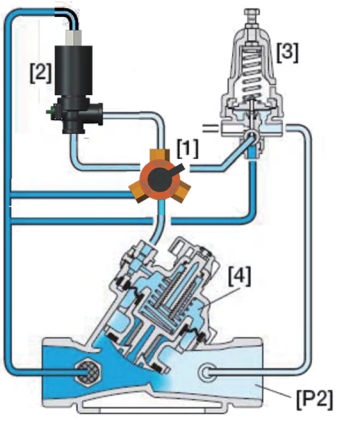

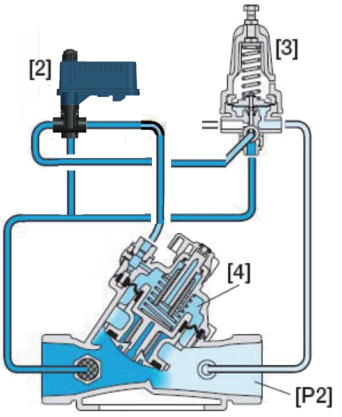

The Shuttle Valve ［1］connects the Solenoid Valve ［2］or the Pressure Reducing Pilot［3］to the Control Chamber ［4］. When the Solenoid Valve is closed, the Pressure Reducing Pilot commands the Valve to throttle closed should Downstream Pressure ［P2］rise above setting and modulate to open when it drops below setting.The solenoid valve is switched by electric signal control, the pipe pressure is guided into the control chamber through the shuttle valve, and the pressure in the control chamber increases, prompting the valve to close. The Solenoid Valve enables manual closing.

MODEL & SPECIFICATION

MODEL	CONNECTIONS SIZE	CONNECTIONS	VOLTOGE (V)	MAX FLOW (m^3/h)	MAX PRESSURE (bar)	WEIGHTS (kg)
AS50PRC-T	1.5”×1.5”	BSPT/NPT	AC24V/DC24V/DC12V(Latch)	13	0.35-10	1.5
AS63PRC-T	2”×2”	BSPT/NPT	AC24V/DC24V/DC12V(Latch)	23	0.35-10	1.7
AS50PRC	1.5”×1.5”	BSPT/NPT	AC24V/DC24V/DC12V(Latch)	15	0.35-10	1.9
AS63PRC	2”×2”	BSPT/NPT/VIC	AC24V/DC24V/DC12V(Latch)	25	0.35-10	2.2
AS90PRC	3”×3”	BSPT/NPT/VIC	AC24V/DC24V/DC12V(Latch)	50	0.35-10	2.04 (with Flanges:3.42)
AS110PRC	4”×4”	Flanges	AC24V/DC24V/DC12V(Latch)	100	0.35-10	6
AS160PRC	6”×6”	Flanges	AC24V/DC24V/DC12V(Latch)	150	0.35-10	12.1

DIMENSION

MODEL	L (mm)	W (mm)	H (mm)
AS50PRC-T	172	200	171
AS63PRC-T	172	200	171
AS50PRC	226	120	192
AS63PRC	230	150	230
AS90PRC	320	160	280
AS110PRC	350	170	330
AS160PRC	436	240	430

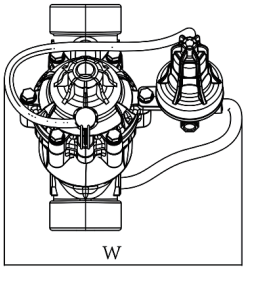

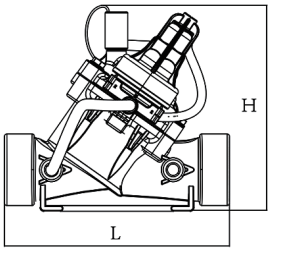

MANUAL PRESSURE SUSTAINING VALVE

ARKA sustaining valve is hydraulically operated, diaphragm actuated control valve that sustains minimum preset upstream(back) pressure and opens fully when line pressure is in excess of setting.





FEATURE & ADVANTAGE

- ✓ Line Pressure Driven，Hydraulically Controlled,
  - Prioritizes pressure zones
  - Control system fill-up
  - Opens fully upon line pressure rise
- ✓ Engineered Plastic Valve with Industrial Grade Design
  - Highly durable, chemical and cavitation resistant
  - No internal bolts and nuts
- ✓ Simple In-Line Inspection and Service
- ✓ High Flow "Y" Valve Body with" Look Through" Design
  - Ultra-high flow capacity, low pressure loss
- ✓ Unitized Flexible Supper Travel(FST) Diaphragm and Guided plug
  - Accurate and stable regulation with smooth closing
  - Requires low opening and actuation pressure
  - Prevents diaphragm erosion and distortion

TYPICAL APPLICATION

Line Fill-Up Control Solutions; Line Emptying Prevention; Systems Subject to Varying Supply Pressure; Infield Filters Backwash Pressure Sustaining; Energy Saving Irrigation Systems.



HOW IT WORKS

The pressure sustaining pilot valve［1］causes the main valve to be slowly closed when the upstream pressure ［P1］is lower than the minmum preset pressure, and fully opens when ［P1］is in excess of setting. Local manual shut-off of the valve can be performed with the manual selection device［2］.

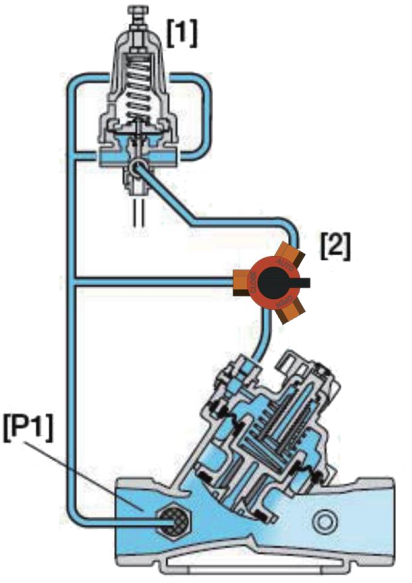

MODEL & SPECIFICATION

MODEL	CONNECTIONS SIZE	CONNECTIONS	MAX FLOW (m^3/h)	MAX PRESSURE (bar)	WEIGHTS (kg)
AS50PS-T	1.5”×1.5”	BSPT/NPT	15	0.35-10	1.5
AS63PS-T	2”×2”	BSPT/NPT	25	0.35-10	1.7
AS50PS	1.5”×1.5”	BSPT/NPT	18	0.35-10	1.86
AS63PS	2”×2”	BSPT/NPT/VIC	30	0.35-10	2.16
AS90PS	3”×3”	BSPT/NPT/Flanges/VIC	50	0.35-10	2.04 (with Flanges:3.42)
AS110PS	4”×4”	Flanges	100	0.35-10	6
AS160PS	6”×6”	Flanges	150	0.35-10	12

DIMENSION

MODEL	L (mm)	W (mm)	H (mm)
AS50PS-T	172	170	171
AS63PS0-T	172	170	171
AS50PS	226	120	192
AS63PS	230	150	230
AS90PS	320	160	280
AS110PS	350	170	330
AS160PS	436	240	430

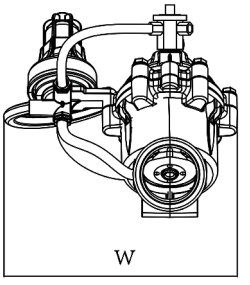

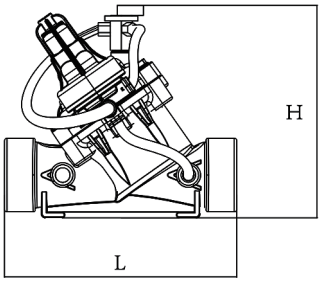

PRESSURE SUSTAINING VALVE WITH SOLENOID CONTROL

ARKA sustaining valve is hydraulically operated, diaphragm actuated control valve that sustains minimum preset upstream(back) pressure and opens fully when line pressure is in excess of setting. It either opens or shuts in response to an electric signal.





FEATURE & ADVANTAGE

- ✓ Line Pressure Driven, Electrically Controlled On/Off
  - Prioritizes pressure zones & controls system fill-up
  - Sustains upstream line pressure
  - Opens fully upon line pressure rise
- ✓ Engineered Plastic Valve with Industrial Grade Design
  - Highly durable, chemical and cavitation resistant
  - No internal bolts and nuts
- ✓ High Flow "Y" Valve Body with" Look Through" Design
  - Ultra-high flow capacity, low pressure loss
- ✓ Unitized Flexible Supper Travel(FST) Diaphragm and Guided plug
  - Accurate and stable regulation with smooth closing
  - Requires low opening and actuation pressure
  - Prevents diaphragm erosion and distortion
- ✓ Simple In-Line Inspection and Service

TYPICAL APPLICATION

Computerized Irrigation Systems; Line Fill-Up Control Solutions; Line Emptying Prevention; remote and/or elevated plots; Infield Filters Backwash Pressure Sustaining; Energy Saving Irrigation Systems.



HOW IT WORKS

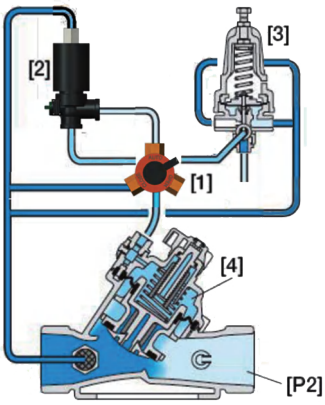

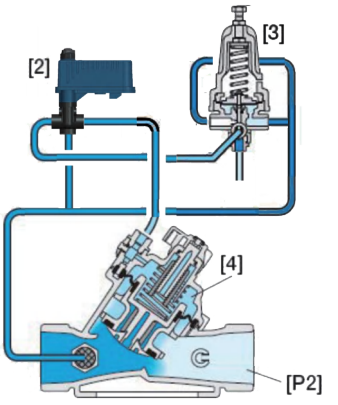

The Shuttle Valve ［1］connects the Solenoid Valve ［2］or the Pressure Sustaining Pilot Valve［3］to the Control Chamber ［4］. When the Solenoid Valve is closed, the Pressure Sustaining Pilot Valve causes the valve to be slowly closed when the upstream pressure ［P1］is lower than the setting, and fully opens when ［P1］rises above the setting. The solenoid valve is switched under the control of the electric signal, and the pipeline pressure is guided into the control chamber through the shuttle valve, and the pressure in the control chamber is increased to cause the valve to close. The solenoid valve also enables local manual shut-off of the valve.

MODEL & SPECIFICATION

MODEL	CONNECTIONS SIZE	CONNECTIONS	VOLTOGE (V)	MAX FLOW (m^3/h)	MAX PRESSURE (bar)	WEIGHTS (kg)
AS50PSC-T	1.5"×1.5"	BSPT/NPT	AC24V/DC24V/DC12V(Latch)	13	0.35-10	1.65
AS63PSC-T	2"×2"	BSPT/NPT	AC24V/DC24V/DC12V(Latch)	23	0.35-10	1.75
AS50PSC	1.5"×1.5"	BSPT/NPT	AC24V/DC24V/DC12V(Latch)	15	0.35-10	1.9
AS63PSC	2"×2"	BSPT/NPT/VIC	AC24V/DC24V/DC12V(Latch)	25	0.35-10	2.2
AS90PSC	3"×3"	BSPT/NPT/VIC/ Flanges	AC24V/DC24V/DC12V(Latch)	50	0.35-10	2.04 (with Flanges:3.42)
AS110PSC	4"×4"	Flanges	AC24V/DC24V/DC12V(Latch)	100	0.35-10	6
AS160PSC	6"×6"	Flanges	AC24V/DC24V/DC12V(Latch)	150	0.35-10	12.1

DIMENSION

MODEL	L (mm)	W (mm)	H (mm)
AS50PSC-T	172	170	171
AS63PSC-T	172	170	171
AS50PSC	226	120	192
AS63PSC	230	150	230
AS90PSC	320	160	280
AS110PSC	350	170	330
AS160PSC	436	240	430

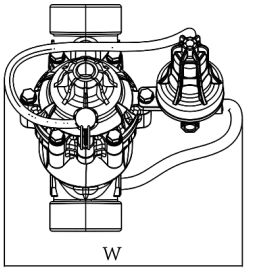

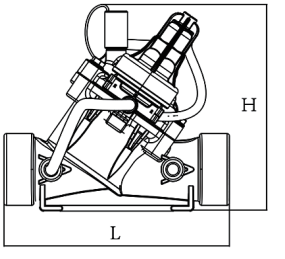

MANUAL PRESSURE REDUCING AND SUSTAINING VALVE

ARKA valve is hydraulically operated, diaphragm actuated control valve that sustains minimum preset upstream(back) pressure and reduces downstream pressure to a constant preset maximum.





FEATURE & ADVANTAGE

- ✓ Line Pressure Driven， Hydraulically Controlled
  - Pretects downstream system
  - Prioritizes pressure zones
  - Control system fill-up
- ✓ Engineered Plastic Valve with Industrial Grade Design
  - Highly durable, chemical and cavitation resistant
  - No internal bolts and nuts
- ✓ High Flow "Y" Valve Body with" Look Through" Design
  - Ultra-high flow capacity, low pressure loss
- ✓ Unitized Flexible Supper Travel(FST) Diaphragm and Guided plug
  - Accurate and stable regulation with smooth closing
  - Requires low opening and actuation pressure
  - Prevents diaphragm erosion and distortion
- ✓ Simple In-Line Inspection and Service

TYPICAL APPLICATION

Line Fill-Up Control Solutions; Line Emptying Prevention; Pressure Reducing Systems; Infield Filters Backwash Pressure Sustaining; Energy Saving Irrigation Systems.



HOW IT WORKS

The pressure reducing pilot valve［1］is connected to the valve control chamber ［2］via the pressure sustaining pilot valve ［3］.The pressure sustaining valve closes the valve when the upstream pressure［P1］is lower than the setting. When the upstream pressure［P1］rises above the setting, the pressure sustaining pilot valve is switched to allow the pressure reducing pilot valve to control the valve to reduce the downstream pressure［P2］.Local manual shut-off of the valve can be achieved by the manual selection device ［4］.

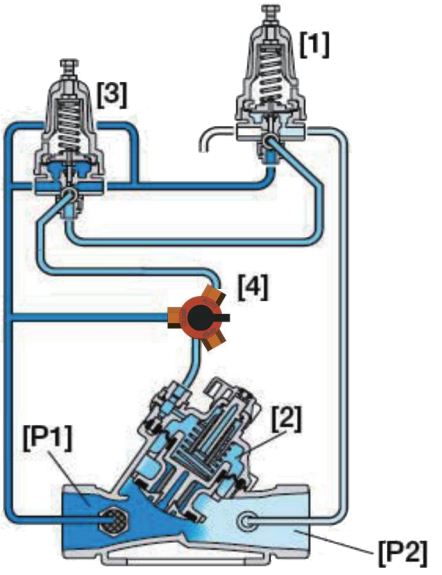

MODEL & SPECIFICATION

MODEL	CONNECTIONS SIZE	CONNECTIONS	MAX FLOW (m^3/h)	MAX PRESSURE (bar)	WEIGHTS (kg)
AS50RS-T	1.5"×1.5"	BSPT/NPT	15	0.35-10	1.75
AS63RS-T	2"×2"	BSPT/NPT	25	0.35-10	1.8
AS50RS	1.5"×1.5"	BSPT/NPT	18	0.35-10	1.93
AS63RS	2"×2"	BSPT/NPT/VIC	30	0.35-10	2.23
AS90RS	3"×3"	BSPT/NPT/Flanges/VIC	50	0.35-10	2.04 (with Flanges:3.42)
AS110RS	4"×4"	Flanges	100	0.35-10	6
AS160RS	6"×6"	Flanges	150	0.35-10	12.2

DIMENSION

MODEL	L (mm)	W (mm)	H (mm)
AS50RS-T	172	200	171
AS63RS-T	172	200	171
AS50RS	226	160	192
AS63RS	230	190	230
AS90RS	320	200	280
AS110RS	350	210	330
AS160RS	436	280	430

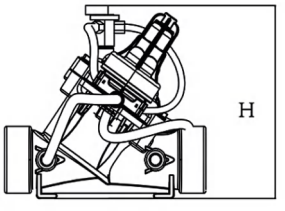

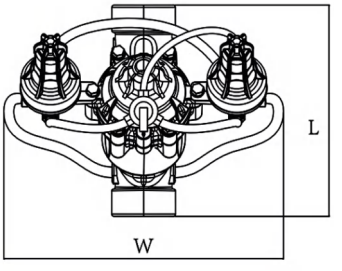

PRESSURE REDUCING AND SUSTAINING VALVE WITH SOLENOID CONTROL

ARKA sustaining valve is hydraulically operated, diaphragm actuated control valve that sustains minimum preset upstream(back) pressure and opens fully when line pressure is in excess of setting. It either opens or shuts in response to an electric signal.





FEATURE & ADVANTAGE

- ✓ Line Pressure Driven, Electrically Controlled On/Off
  - Protects downstream system
  - Prioritizes pressure zones & controls system fill-up
  - Sustains upstream line pressure
- ✓ Unitized Flexible Supper Travel(FST) Diaphragm and Guided Plug
  - Accurate and stable regulation with smooth closing
  - Requires low opening and actuation pressure
  - Prevents diaphragm erosion and distortion
- ✓ High Flow "Y" Valve Body with" Look Through" Design
  - Ultra-high flow capacity, low pressure loss
- ✓ Engineered Plastic Valve with Industrial Grade Design
  - Highly durable, chemical and cavitation resistant
  - No internal bolts and nuts
- ✓ User-Friendly Design
  - Easy pressure setting
  - Simple In-Line Inspection and Service

TYPICAL APPLICATION

Computerized Irrigation Systems; Line Fill-Up Control Solutions; Pressure Reduciing Systems； remote and/or elevated plots; Infield Filters Backwash Pressure Sustaining; Energy Saving Irrigation Systems.



HOW IT WORKS

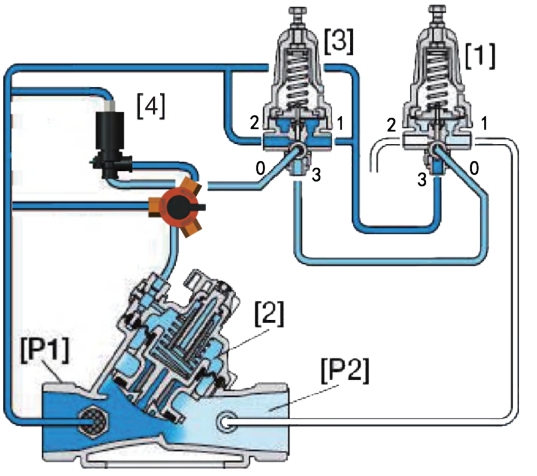

The pressure reducing pilot valve［1］is connected to the valve control chamber ［2］via the pressure sustaining pilot valve ［3］and the shuttle valve. The pressure sustaining pilot valve closes the valve when the upstream pressure［P1］is lower than the setting. When the upstream pressure［P1］rises above the setting, the pressure sustaining pilot valve is switched to make the pressure reducing pilot valve control the valve to reduce the downstream pressure［P2］. The solenoid valve［4］is switched by electric signal, the pressure is guided into the shuttle valve. The shuttle valve block each pilot valves, the line pressure is transferred the control chamber, and the valve closes.

MODEL & SPECIFICATION

MODEL	CONNECTIONS SIZE	CONNECTIONS	VOLTOGE (V)	MAX FLOW (m^3/h)	MAX PRESSURE (bar)	WEIGHTS (kg)
AS50RSC-T	1.5”×1.5”	BSPT/NPT	AC24V/DC24V/DC12V(Latch)	13	0.35-10	1.75
AS63RSC-T	2”×2”	BSPT/NPT	AC24V/DC24V/DC12V(Latch)	23	0.35-10	1.8
AS50RSC	1.5”×1.5”	BSPT/NPT	AC24V/DC24V/DC12V(Latch)	15	0.35-10	1.93
AS63RSC	2”×2”	BSPT/NPT/VIC	AC24V/DC24V/DC12V(Latch)	25	0.35-10	2.23
AS90RSC	3”×3”	BSPT/NPT/VIC/ Flanges	AC24V/DC24V/DC12V(Latch)	50	0.35-10	2.04 (with Flanges:3.42)
AS110RSC	4”×4”	Flanges	AC24V/DC24V/DC12V(Latch)	100	0.35-10	6
AS160RSC	6”×6”	Flanges	AC24V/DC24V/DC12V(Latch)	150	0.35-10	12.3

DIMENSION

MODEL	L (mm)	W (mm)	H (mm)
AS50RSC-T	172	200	171
AS63RSC-T	172	200	171
AS50RSC	226	160	192
AS63RSC	230	190	230
AS90RSC	320	200	280
AS110RSC	350	210	330
AS160RSC	436	280	430

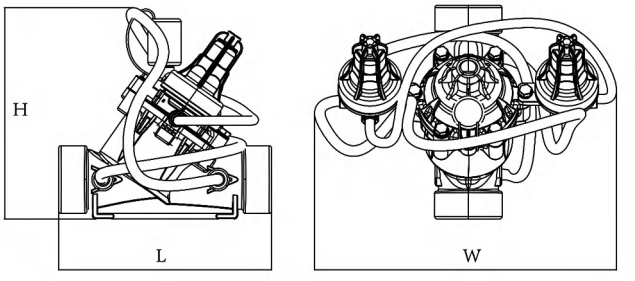

BACKWASH HYDRAULIC VALVE



ARKA series back-flushing control valves are 3-way hydraulic drive diaphragm control valves with low pressure seal and smooth flow change. ARKA series back-flushing control valve can be connected with gravel filter or disc filter into an automatic backwash filtration system, and it can also change the direction of flow in water supply. The control valve has 2 control chambers,which can be deformed into angular flow or direct flow through different spring assembly direction.The unique cavity design ensures large flow volume of water supply.

FEATURE & ADVANTAGE

- Hydraulic drive diaphragm control valve
- Unique plastic spool assembly design with tight sealing and corrosion resistance
- Short stroke of valves stabilizing water flow and avoiding blend of clean and dirty water
- Corrosion-proof and long lasting PP material
- With a easily dismantled driven system for convenient on production line checking and maintenance



TYPICAL APPLICATION

Auto back-flushing filtration system:

Assembled into a backflushing filtration system with sand media filter or disc filter.

Water supply system:

Being used in the water supply pipelines to reroute the water flow into angle or straight flow direction.



HOW IT WORKS

Straight Flow Valve

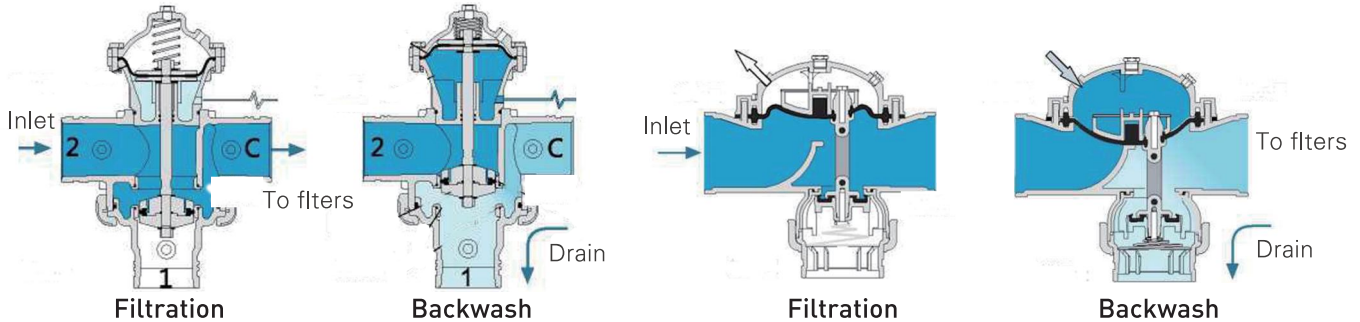

MODEL & SPECIFICATION

MODEL	CONNECTIONS SIZE	CONNECTIONS	MAX FLOW (m^3/h)	MAX PRESSURE (bar)	WEIGHTS (kg)
F63FM	2"×2"×2"	BSPT/VIC	30	0.7-10	2.8
F90FM	3"×3"×3"(2")	VIC	50	0.7-10	5.5
F110FM	4"×4"x4"(3")	VIC	100	0.7-10	9.9
F110FMS	4"×4"x3"(4")	VIC	80	0.7-10	5.5

DIMENSION

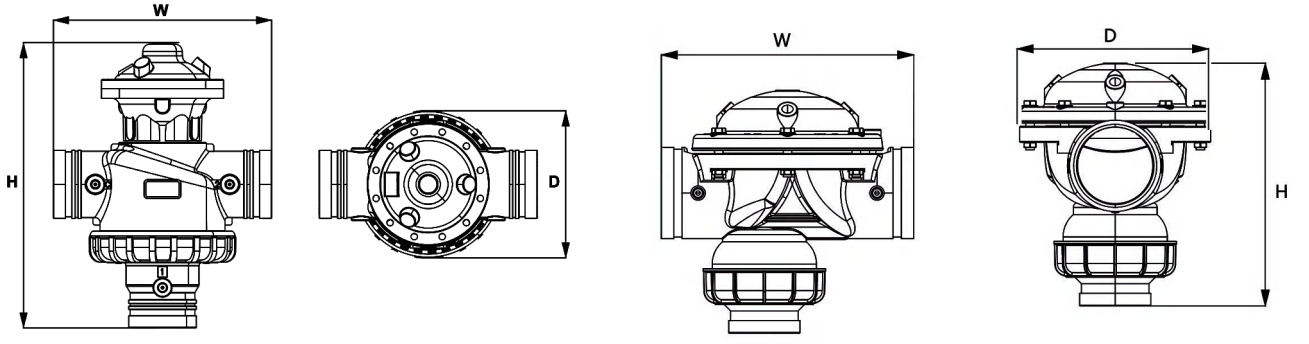

MODEL	H (mm)	W (mm)	D (mm)
F63FM	274	230	160
F90FM	378	287	192
F110FM	464	330	260
F110FMS	320	320	240

AIR VALVE



With advanced aerodynamic design, ARKA AIR VALVES provide a sound solution for air intake and exhaust during the filtration and water supplying. The air valves balance the air intake and exhaust to ensure the pipes are sealed closely in low pressure. ARKA AIR VALVES offers the most reliable solution to overcome all challenges that may occur on a pipeline for a long lasting operational system and most efficient water network, they are widely used in the agriculture and municipal irrigation and industrial water recycling system.

TECHNICAL SPECIFICATIONS

- Operating pressure: 0.2 to 10 bar / 2.9 to 145 psi
  0.2 to 16 bar/ 2.9 to 230 psi
- Maximal operating temperature: 60°C / 140°F

A TYPE KINETIC VALVES

A-type kinetic valve can open the inlet valve quickly when a negative vacuum pressure is generated inside the system or pipeline, and a large amount of inlet air destroys the negative vacuum pressure formed inside the system or pipeline, the inlet valve is sealed under water pressure.

FEATURE & ADVANTAGE

- Big size air inlet allowing large flow;
- PA and PP material with corrosion, acid and alkaline resistant features;
- Compact structure & simple design & durability;
- Easy installation.

TYPICAL APPLICATION

The air valves break the vacuum formation and enhance the efficiency of draining of the filtration system.

HOW IT WORKS



When filtration system is under pressure:

When the filtration system works under pressure, air will be gathered at the bottom of chamber, then the float will move up to seal the inlet.

When filtration system is in empty status:

When the system or pipe is drained empty, negative pressure will be formed in the air valve. Meanwhile the float moves down to take in air against vacuum formation.

DIMENSION

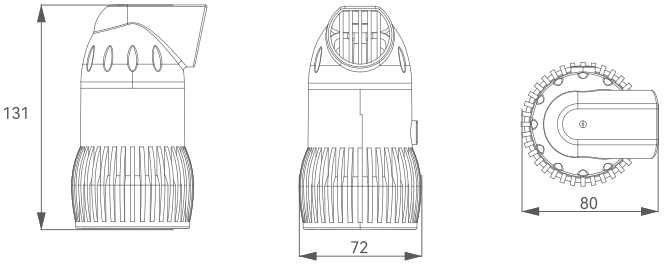



SPECIFICATION

MODEL	CONNECTION SIZES	CONNECTIONS	ORIFICE SIZE (mm^2)	WORKING PRESSURE (bar)	DIMENSION (mm)	WEIGHTS (g)
A20	2”	BSPT/NPT	858	0.2-16	131x72x80	185

K TYPE VACUUM VALVES

K-type kinetic valves are applicable to all kinds of irrigation systems. It evacuates air quickly during pipeline filling and takes in large volume air while draining. Adopted its advanced aerodynamic design and kinetic orifice, this valve provides excellent protection against vacuum formation and large volume air existing, with improved sealing under low pressure conditions.



TYPICAL APPLICATION

K type kinetic valves can prevent the air from accumulating or eliminate negative pressure applying in filtration pipelines, water supply system, nearby water meter & control valve and pipelines for residential area and industrial field.

FEATURE & ADVANTAGE

- Advanced aerodynamic design;
- One-piece floating ball design ensures ontime shutting of outlet while the high speed airflow occurs;
- Big inlet size allowing large flow;
- Quality sealing prevents leakage under low pressure conditions (0.2 bar/2.9 psi);
- PA and PP material with corrosion, acid and alkaline resistant features and durable;
- Multi-installation sizes for various market demands.

HOW IT WORKS

When filtration system is filling:

During filling water into the pipeline, massive air will be evacuated from kinetic air intake & exhaust hole. The floating ball moves upwards to close the orifice after water flows into the chamber. With aerodynamic design and the anti-blow design, the floating ball ensures shutting of outlet on the right time while the high speed air flow occurs.

When filtration system is under pressure:

The kinetic valve keeps closing.

When the system or pipe is drained empty:

When negative pressure difference is formed, the air pushes the float downward. The kinetic valve opens and let air enter the air valve to avoid the formation of negative vacuum pressure inside the system.



SPECIFICATION

MODEL	CONNECTION SIZES	CONNECTIONS	ORIFICE SIZE (mm^2)	WORKING PRESSURE (bar)	DIMENSION (mm)	WEIGHTS (g)
KA10-25	3/4"	BSPT/NPT	288	0.2-16	108x66x63	185
KA10-32	1"	BSPT/NPT	288	0.2-16	108x66x63	185
KA11-25	3/4"	BSPT/NPT	288	0.2-16	109x78x66	185
KA11-32	1"	BSPT/NPT	288	0.2-16	109x78x66	185
KA12-25	3/4"	BSPT/NPT	288	0.2-16	124x58x58	95
KA12-32	1"	BSPT/NPT	288	0.2-16	124x58x58	95
KA30-25	3/4"	BSPT/NPT	14	0.2-16	137x91x78	475
KA30-32	1"	BSPT/NPT	14	0.2-16	137x91x78	475
K10	1"	BSPT/NPT	314	0.2-16	179x132x87	470
K20	2"	BSPT/NPT	908	0.2-16	249x184x111	1052

DIMENSION

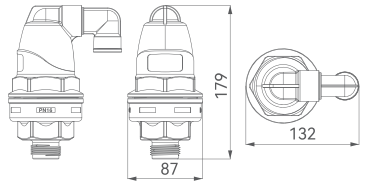

K10

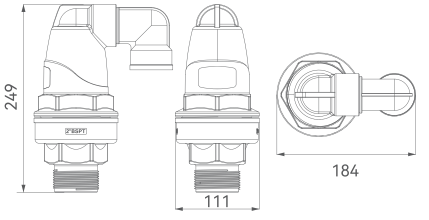

K20

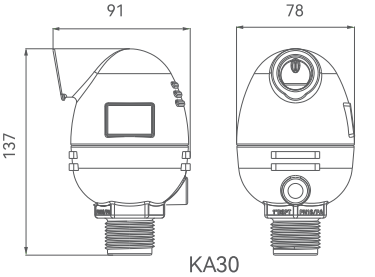

KA30

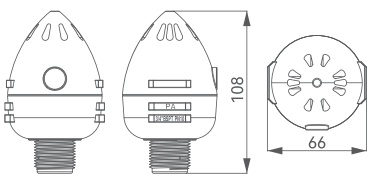

KA10-25/KA10-32

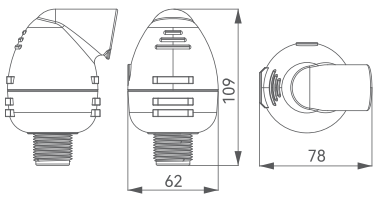

KA11-25/KA11-32

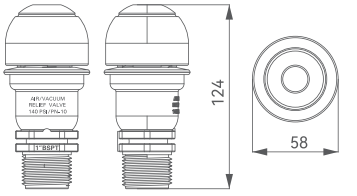

KA12-25/KA12-32

C TYPE KINETIC VALVES

C-type kinetic valves are of high quality for various irrigation systems and operating conditions. When the system is filled with water, the air valve discharges a large amount of air from the pipe; When the system is under pressure, the air valve effectively discharges a small amount of air from the pipe; When the system is emptied, the air valve draws in a large amount of air. Adopted advanced aerodynamic design, the valve provides excellent protection against air accumulation and vacuum formation, with improved sealing in low pressure conditions.


C10


C12


C21


C50


C20

TYPICAL APPLICATION

C type kinetic valves can prevent the air from accumulating or eliminate negative pressure apply in filtration pipelines, water supply system, nearby water meter & control valve and pipelines for residential area and industrial field.

FEATURE & ADVANTAGE

- Advanced aerodynamic design ; Prevents premature closing, without disturbing air intake or discharge ;
- One-piece floating ball design ensures ontime shutting of outlet while the high speed airflow occurs;
- Dynamic sealing prevents leakage under low pressure conditions (0.2 bar/2.9 psi);
- PA and PP material with corrosion, acid and alkaline resistant ; lower maintenance and increased life span;
- Multi-installation sizes for various market demands.

HOW IT WORKS

When system is filling with water:

A large amount of air is discharged from the kinetic inlet and exhaust port. After the water entered the chamber, the float rises and closes the inlet and exhaust port. With aerodynamic design and the anti-blow design, the floating ball ensures shutting of outlet on the right time while the high speed airflow occurs.

Under Pressure:

When the system is under pressure, air accumulates above the valve cavity. When the amount of air increases, the level inside the valve drops and the float drops as well. At this time, the aut omatic micro-exhaust port opens to discharge the accumulated air. The level rises, the float rises, and then the automatic micro-exhaust port closes.

System draining:

When the system is emptied, a negative pressure difference is formed and the air pushes the float downward. With the kinetic inlet and exhaust port open, the air goes into the air valve to avoid the formation of a negative vacuum pressure in the system.

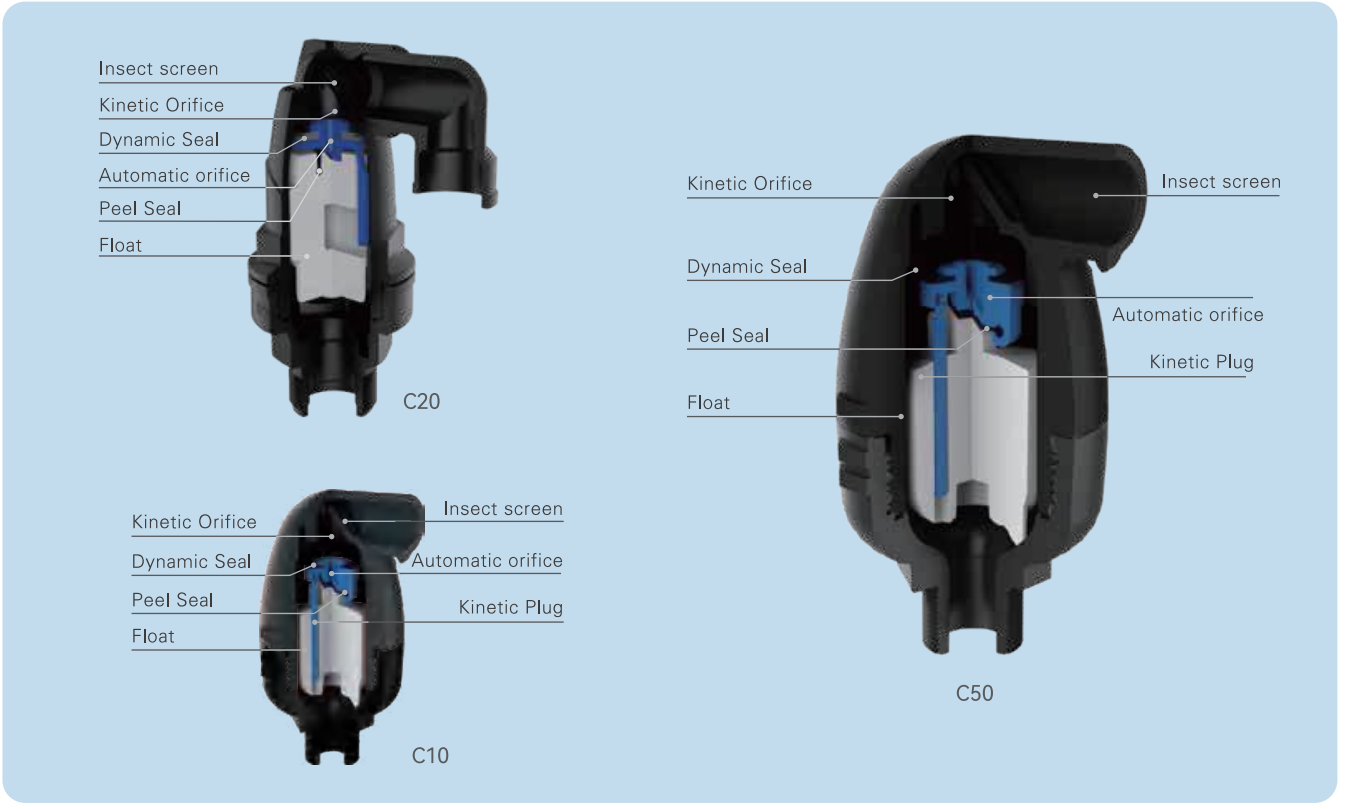

SPECIFICATION

MODEL	CONNECTION SIZES	CONNECTIONS	ORIFICE SIZE (mm^2)	WORKING PRESSURE (bar)	DIMENSION (mm)	WEIGHTS (g)
C10	1”	BSPT/NPT	454	0.2-16	161x97x86	488
C12	1”-1 1/2”	BSPT/NPT	374	0.2-16	165x75x70	290
C20	2”	BSPT/NPT	908	0.2-16	249x184x111	1020
C21	2”	BSPT/NPT	1074	0.2-16	270x110x110	900
C50	2”	BSPT/NPT	1200	0.2-16	255x130x120	1100

DIMENSION

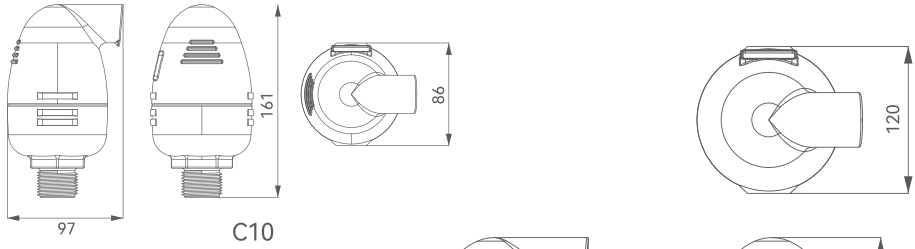

C10

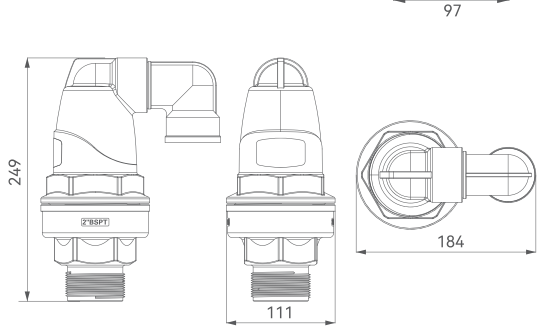

C20

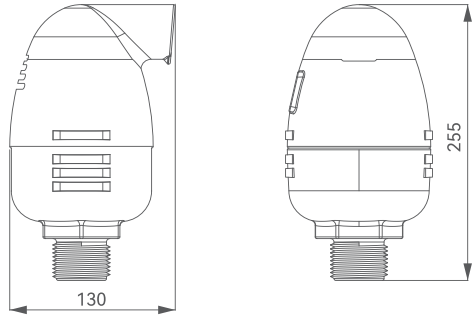

C50

PERFORMANCE

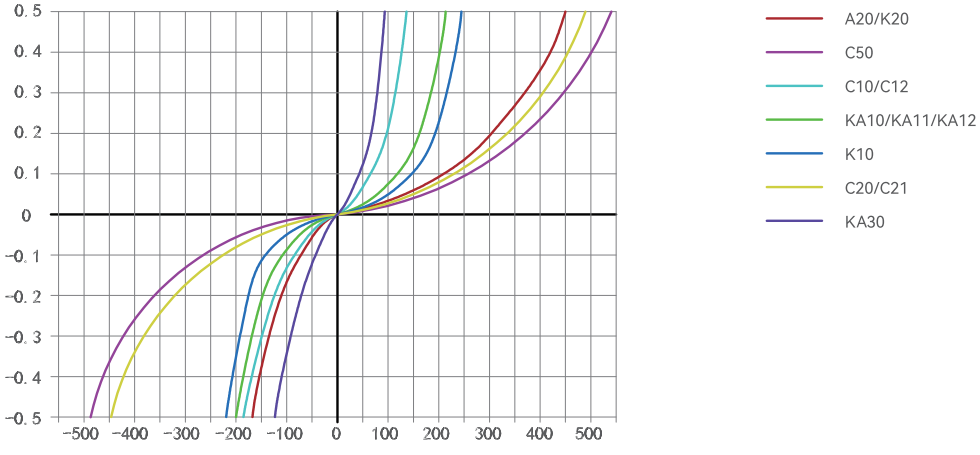

CHECK VALVE



ARKA series check valve is made of all plastic material, with smooth action,sensitive response, excellent sealing and preventing water backflow. Can be used with protection filter system and irrigation system.

The check valve is automatically opened by the water pressure of the pipe network or the external pressure source (water pump), and automatically closed when there is no pressure. It is suitable for agricultural irrigation systems and industrial water treatment systems.

FEATURE & ADVANTAGE

- Installation method:
  Flange-to-pressure type,
  Inclined installation angle,
  Both horizontal and vertical.
- Plastic valve, industrial grade design standard, carefully crafted:
  Durable, resistant to chemical corrosion and cavitation.
- The valve body adopts a full-bore high-flow design:
  The overflow is extremely large, and the head loss is small.
- Advantages:
  Stable valve, ultra-quiet, low opening pressure, good sealing, convenient online inspection and maintenance.

WORKING PRINCIPLE

open the valve



closed the valve

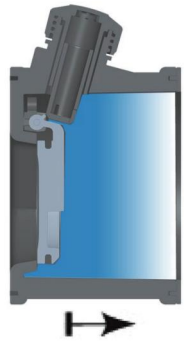

The pressure of the pipeline enters the valve body, and the force acts on the valve disc which makes the valve open. When the pipeline pressure is low or no pressure, the valve disc is automatically closed to prevent water from flowing back.

MODEL & SPECIFICATION

MODEL	SIZE	CONNECTOR	MAX FLOW (m^3/h)	PRESSURE (bar)	WEIGHTS (kg)
AS90NRV	3”	Flange	50	10	0.63
AS110NRV	4”	Flange	100	10	0.96
AS160NRV	6”	Flange	160	10	2.72

DIMENSION

MODEL	A(mm)	B (mm)	D (mm)
AS90NRV	81	171	131
AS110NRV	114	192	152
AS160NRV	145	290	220

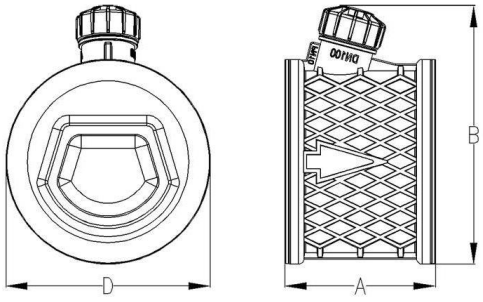

Various flange bolt sizes

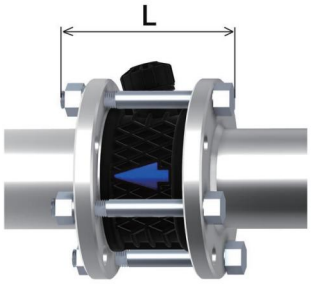

Stainless Steel Flange Bolt Size and Quantity

MODEL	SIZE	BOLT SIZE	AMOUNT
AS90NRV	3”	M16x345mm	8
AS110NRV	4”	M16x175mm	8
AS160NRV	6”	M20x220mm	8

PVC Flange Bolt Size and Quantity

MODEL	SIZE	BOLT SIZE	AMOUNT
AS90NRV	3”	M16x150mm	8
AS110NRV	4”	M16x180mm	8
AS160NRV	6”	M20x230mm	8

PE Flange Bolt Size and Quantity

MODEL	SIZE	BOLT SIZE	AMOUNT
AS90NRV	3”	M16x200mm	8
AS110NRV	4”	M16x200mm	8
AS160NRV	6”	M20x260mm	8

BOTTOM VALVE



ARKA series Bottom Valve is made of all plastic material, which is smooth in action, sensitive in response, excellent in sealing, preventing water backflow and protecting the filter system and irrigation system.

Bottom valve, using the water pressure of pipe network or any external pressure source(water pump) for automatically open and shuts off when there is no pressure, which is suitable for Agricultural Irrigation Systems and Industrial Water Treatment Systems.

FEATURE & ADVANTAGE

- ✓ Installation Method
  - Flange pressure type
  - Installation can be horizontal, inclined,vertical
- ✓ Plastic valves crafted to an industrial grade design
  - Durable, resistant to chemical corrosion and cavition
- ✓ Easy online inspection and maintenance
- ✓ The valve body adopts a full-bore and high-flow design
  - Large flow,small head loss
- ✓ Valve body performance
  - Smooth action and super quiet
  - Low pressure required for open
  - Excellent sealing, water tight

WORKING PRINCIPLE

Valve open status

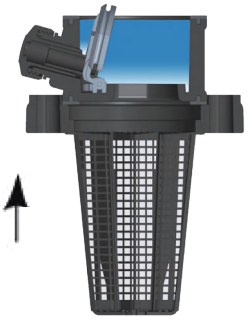

Valve close status

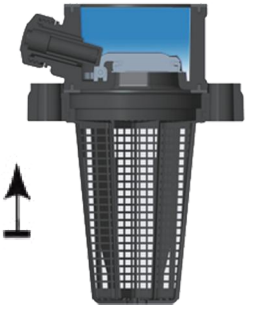

When the water pressure enters valve body through the filter screen, the force acts on the valve flap, which makes the bottom valve open. The higher the pressure, the more the valve disc opens to the maximum position, and the water flow reaches the maximum. When water pressure is reduced to zero pressure, the valve flap of the valve is automatically closed to prevent the water from flowing back.

MODEL & SPECIFICATION

MODEL	SIZE	CONNECTOR	MAX FLOW (m^3/h)	PRESSURE (bar)	WEIGHTS (kg)
AS90FV	3”	Flange	50	10	1.63
AS110FV	4”	Flange	100	10	2.11
AS160FV	6”	Flange	160	10	4.55

DIMENSION

MODEL	A(mm)	B (mm)	D (mm)
AS90FV	275	212	197
AS110FV	305	235	230
AS160FV	345	330	290

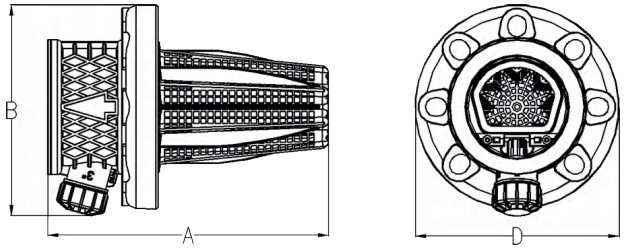

Various flange bolt sizes

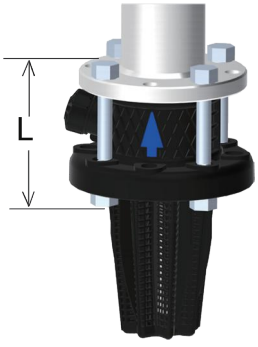

Stainless Steel Flange Bolt Size and Quantity

MODEL	SIZE	BOLT SIZE	AMOUNT
AS90FV	3”	M16x345mm	8
AS110FV	4”	M16x175mm	8
AS160FV	6”	M20x220mm	8

PVC Flange Bolt Size and Quantity

MODEL	SIZE	BOLT SIZE	AMOUNT
AS90FV	3”	M16x150mm	8
AS110FV	4”	M16x180mm	8
AS160FV	6”	M20x230mm	8

PE Flange Bolt Size and Quantity

MODEL	SIZE	BOLT SIZE	AMOUNT
AS90FV	3”	M16x200mm	8
AS110FV	4”	M16x200mm	8
AS160FV	6”	M20x260mm	8

BOTTOM VALVE



ARKA series Bottom Valve is made of all plastic material, which is smooth in action, sensitive in response, excellent in sealing, preventing water backflow and protecting the filter system and irrigation system.

Bottom valve, using the water pressure of pipe network or any external pressure source(water pump) for automatically open and shuts off when there is no pressure, which is suitable for Agricultural Irrigation Systems and Industrial Water Treatment Systems.

FEATURE & ADVANTAGE

- Installation Method
  - Flange pressure type
  - Installation can be horizontal, inclined,vertical
- Plastic valves crafted to an industrial grade design
  - Durable, resistant to chemical corrosion and cavition
- Easy online inspection and maintenance
- The valve body adopts a full-bore and high-flow design
  - Large flow,small head loss
- Valve body performance
  - Smooth action and super quiet
  - Electric signal turns on, precise control
  - Excellent sealing, water tight

WORKING PRINCIPLE

Valve open status

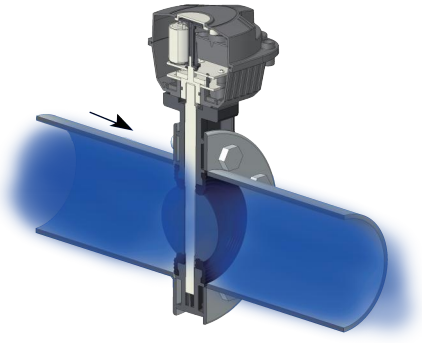

Valve close status

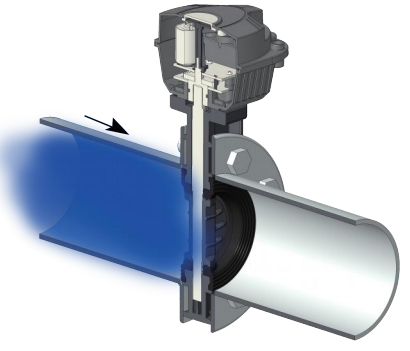

The water flows through the pipeline and reaches one end of the butterfly valve. The valve control system gives an electrical signal to control the internal motor. The internal motor rotates to drive the disc to rotate, causing the butterfly valve to open. After a period of time, the opening reaches the maximum position and the water flow reaches the maximum. When the control system gives a closing electrical signal, the disc rotates and closes, and the valve closes to prevent water from flowing back.

MODEL & SPECIFICATION

MODEL	SIZE	CONNECTOR	MAX FLOW (m^3/h)	PRESSURE (bar)	WEIGHTS (kg)
AS90 BV	3”	Flange	50	10	2.38
AS110BV	4”	Flange	100	10	2.88
AS125BV	5”	Flange	160	10	3.77

Various flange bolt sizes

MODEL	SIZE	BOLT SIZE	AMOUNT
AS90 BV	3”	M16x100mm	8
AS110BV	4”	M16x100mm	8
AS125BV	5”	M16x100mm	8

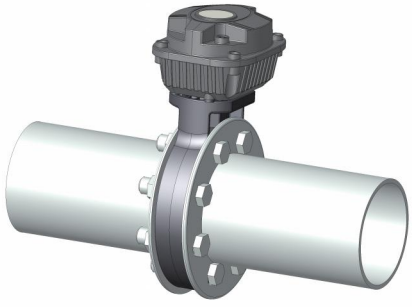

DIMENSION

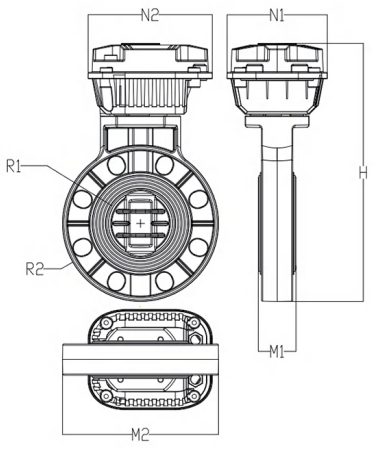

MODEL	H(mm)	N1(mm)	N2(mm)	M1(mm)	M2(mm)	R1(mm)	R2(mm)
AS90 BV	323	125	155	47	195	85	195
AS110BV	359	125	155	50	226	110	226
AS125BV	390	125	155	62	250	125	250

AUTOMATIC CONTROLLER BACKWASHING CONTROLLER

ARKA FILTRON 1-10 series Automatic Backwashing Controller is composed of computer microchip, program software, differential pressure sensor, transformer and LCD.



Through differential pressure or time start signal output, the opening and closing of the three-way backwashing valve are controlled to achieve the purpose of automatic control.



FEATURE & ADVANTAGE

- Build-in differential pressure integrated structure design. IP65 waterproof
- The power supply mode is available in DC 6V and AC 110V/220V
- When the battery voltage is insufficient, the low voltage alarm will be displayed on the screen
- The screen display can be Chinese and English for option
- Modular design, which can control up to 10 filter units
- The DC controller can flexibly select the corresponding number of stations accord with the number of filter units in the system
- The AC controller can automatically detect and display the number of back-washing filter units

TYPICAL APPLICATION

Suitable for auto backflushing disc filter system and auto backflushing san media filter system.

FUNCTIONS

- The controller has a solenoid valve control function from one to ten filter units.
- When the controller is powered by AC 220V power supply, there are output AC 24V or DC 24V two modes for option.
- The controller has automatic intelligent identification of the number of backwashing solenoid valves which connected to it.
- The controller has the functions of anti-overcurrent, anti-overvoltage, anti-induction lightning strike, and various alarm functions: such as differential pressure trigger times overrun alarm, low voltage alarm, low water pressure alarm, etc.
- The controller can accumulate the times of backwashing by timing start, differential pressure start and manual start.
- The controller can only control the control signal of one main valve (solenoid pressure sustaining valve or solenoid valve).
- The controller is equipped with a customized LCD screen for user interaction and real-time reflection of equipment operating status.
- Humanized control and display interface, easy to operate.

MODEL & SPECIFICATION

	FUNCTION						INPUT		OUTPUT	
MODEL	TIMING BACK-FLUSHING	DP BACK-FLUSHING	MANUAL BACK-FLUSHING	ALARM	LP PROTEC-TION	BACK-FLUSHING COUNT	PRESSURE SENSOR	DP SENSOR	PC VALVE	ARLARM
F10AC	YES	YES	YES	YES	YES	YES	YES	YES	YES	YES
F10DC	YES	YES	YES	YES	YES	YES	YES	YES	YES	YES
F06DC	YES	YES	YES	YES	YES	YES	YES	YES	YES	YES

MODEL	VOLTAGE	CONTROL ROUTE	SUPPLY VOLTAGE	SCREEN DISPLAY	WORKING TEMPERATURE
F10AC	AC110V/220V	10	AC24V	LCD field screen	0℃ – 60℃
F10DC	DC6V	10	DC12-40V Latch	LCD field screen	0℃ – 60℃
F06DC	DC6V	6	DC12-40V Latch	LCD field screen	0℃ – 60℃

DIMENSION

MODEL	H(mm)	W(mm)	L(mm)	A(mm)	B(mm)	C(mm)
F10AC	230	150	105	121.5	72	96
F10DC	230	150	105	121.5	72	96
F06DC	180	105	65	80	80	100

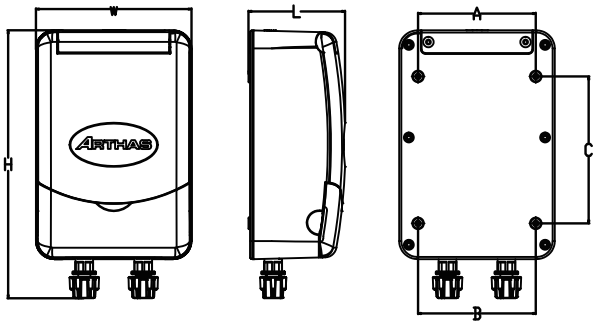

SOLENOID VALVE



ARKA Solenoid valve is to switch the direction of water flow by applying the power signal to the diaphragm through the motor torque, and then convert the load into hydraulic control.

It can be matched with general controller and suitable for various irrigation automatic control systems.

FEATURE & ADVANTAGE

- AC 24V, DC 24V, DC 12V and Latch 12-40V for option
- Split structure design, built-in diaphragm, separate motor control body and water passage, long service life
- Large opening flow channel design, fast response speed of the control valve and strong anti-blocking function
- Manual control knob with three modes: open, close and automatic
- Three-way flow channel base can be configured with 2-position 3-way back-wash valve
- Low energy consumption enables long-distance control

SPECIFICATION

Working Pressure: 0-10Bar
Waterproof level: IP68
Leads: 1 m
Filtration Grade: 80 mesh min
Hydraulic outlet: 1/8" female thread



Latch Version

Working Voltage: 12-40V

Pulse width: 100-300 ms

AC/DC Version

Working Voltage: AC 24V(21-27V) or DC 24V(21-27V) or DC 12V（12-40V）

Leads

DC and Latch version: Red and black wires. Red wire to positive pole and black wire to negative pole

AC version: Both are black wires（Regardless of positive and negative poles）

CONNECTION METHOD OF MOTOR HEAD AND VALVE BODY

DC and LATCH VERSION	RED WIRE TO POSITIVE POLE	BLACK WIRE TO NEGATIVE POLE	BLACK WIRE TO POSITIVE POLE	RED WIRE TO NEGATIVE POLE
POWER UPS	B connect with COM		A connect with COM	
POWER OUTAGE	A connect with COM		B connect with COM	

AC VERSION	BLACK TO POSITIVE POLE	BLACK TO NEGATIVE POLE
POWER UPS	B connect with COM	
POWER OUTAGE	A connect with COM	

DIMENSION

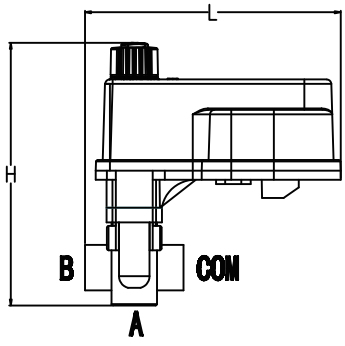

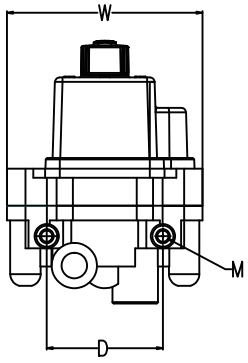

MODEL	L(mm)	H(mm)	W(mm)	D(mm)	M(mm)	A	B	COM
SV24AC	84	87.3	64.5	38	4.5	1/8”BSP	1/8”BSP	1/8”BSP
SV24DC	84	87.3	64.5	38	4.5	1/8”BSP	1/8”BSP	1/8”BSP
SV12LC	84	87.3	64.5	38	4.5	1/8”BSP	1/8”BSP	1/8”BSP

Modular design, works as an automatic unattended water filtration system, which ensures continuous water supply while discharging the sewage.

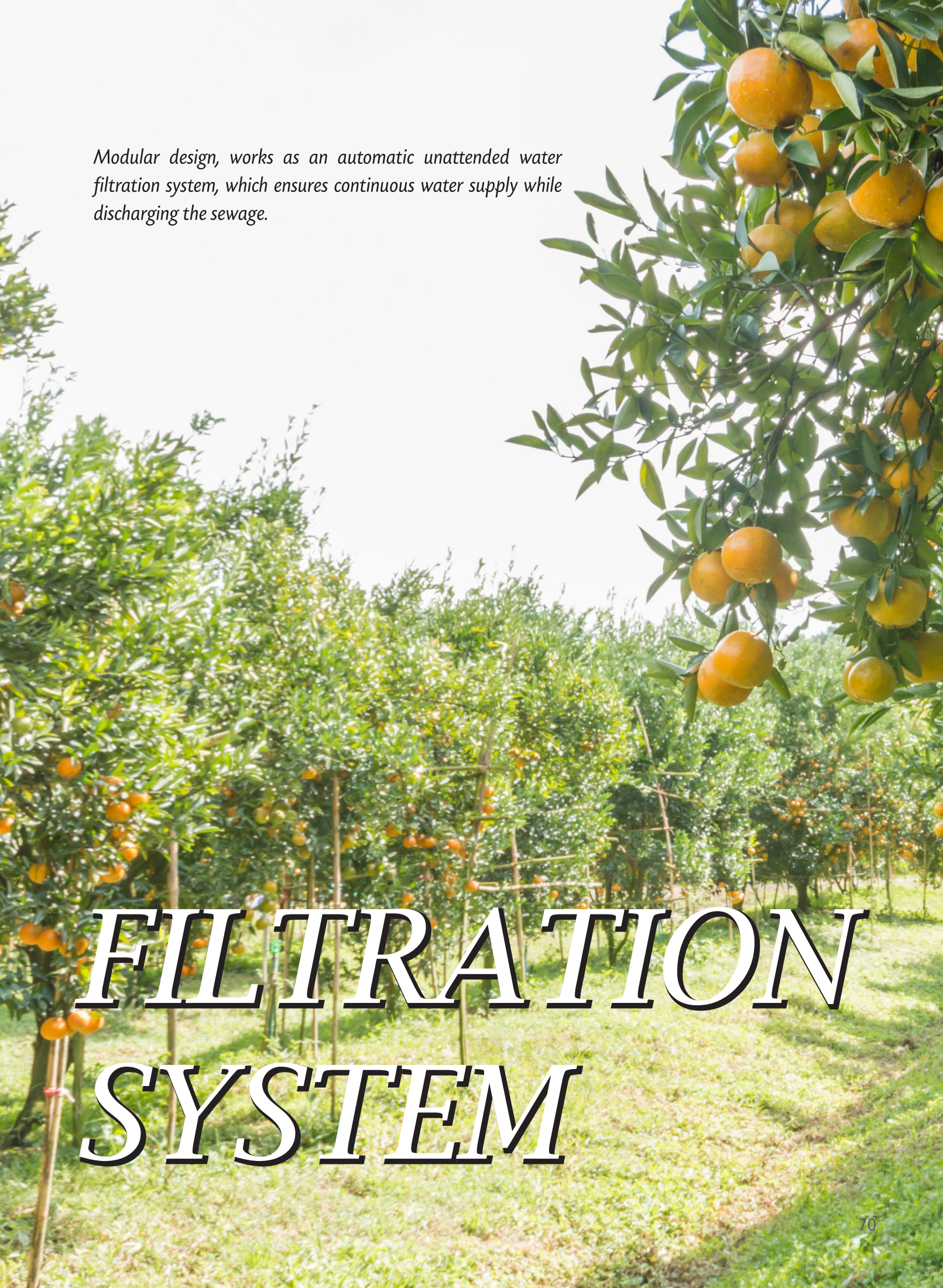

FILTRATION SYSTEM

T TYPE AUTO DISC FILTRATION SYSTEM



FEATURE & ADVANTAGE

- Manufactured in polypropylene, resistance to chemical products, wear-resistant;
- Chip built-in controller to collect water pressure data, achieve unmanned automatic perform;
- Continuous filtering for water supply during back-flush;



- Smart back-flush auto-procedure setting by the discrepancy of water pressure between inlet & outlet;
- Manual setting for the back-flush procedure regularly;
- Efficient water saving in auto-flushing with minimum pressure 2.8 bar and flow rate 5 L/s minimum.

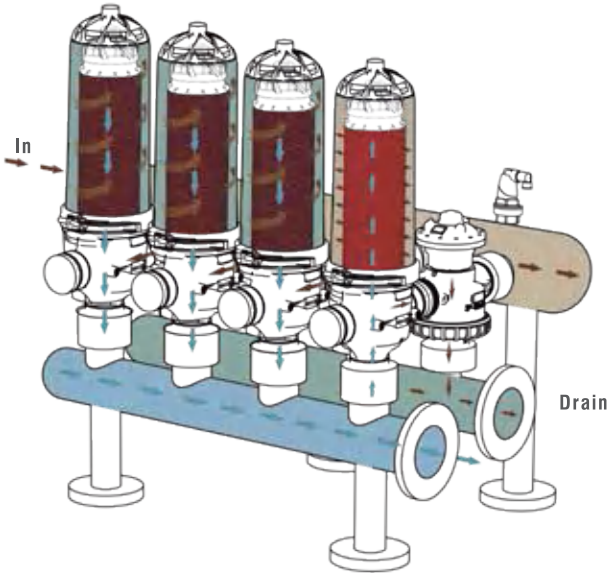

HOW IT WORKS

Filtration stage:

Under the command of the controller,the dirty water flow into the filters in filtration stage via the back-flushing control valves,then the vortex and the disc keeps the particles in the groove of the discs,the clean water flow into the outlet manifold.

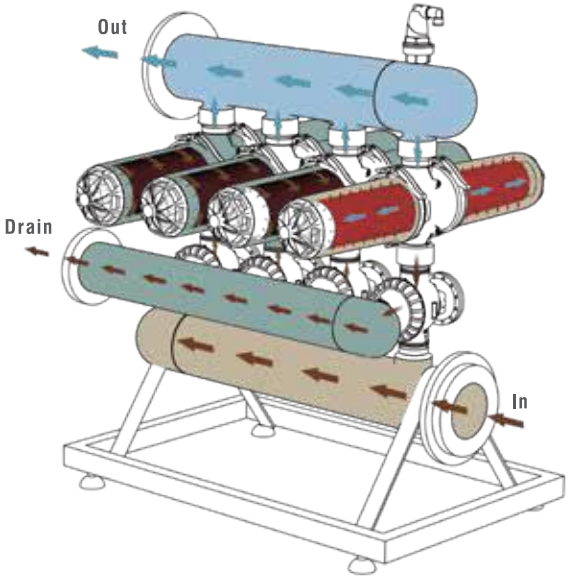

Backwashing stage:

Under the command of the controller,only one of filter starts back-flushing at a time.The back-flushing control valves change the water flow direction,then the filtered water is introduced in reverse through the filtering element which decompresses the stack of discs for the backwash procedure.The solids are expelled from the discs and discharged through the drain manifold.

SPECIFICATION

		3 INCH UINT		2 INCH UINT	
QUALITY OF WATER	MICRON / MESH	130 / 120	130 / 120	130 / 120	100 / 150
GOOD	m^3/h	36	32	25	17
AVERAGE	m^3/h	32	30	20	14
POOR	m^3/h	26	24	18	10
VERY POOR	m^3/h	16	14	12	7

BACKWASH PRESSURE

	200-130 micron 75-120 mesh	100 micron 150 mesh	50-20 micron
MIN BACKWASH PRESSURE	1.8 bar	2.5 bar	3 bar
	26 psi	36 psi	44 psi
MIN BACKWASH FLOW	2.5 l/s	3.1 l/s	3.3 l/s
	39 gpm	50 gpm	52 gpm



HEAD LOSS

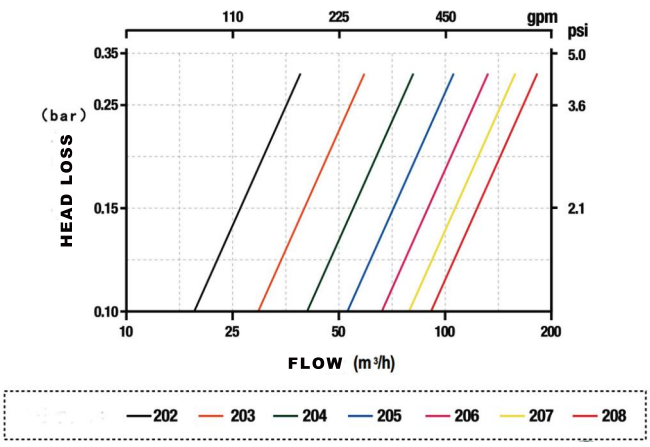

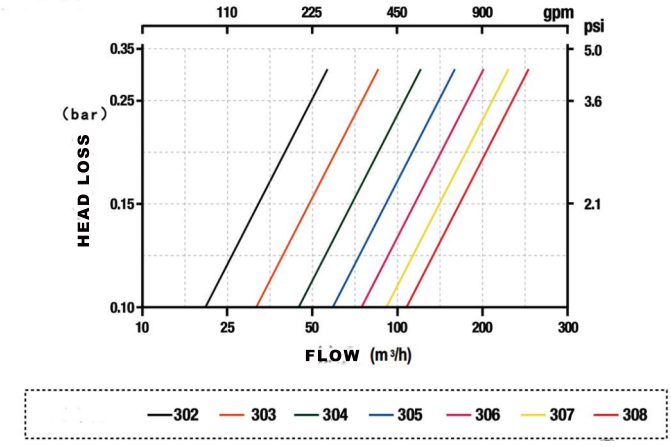

DIMENSION

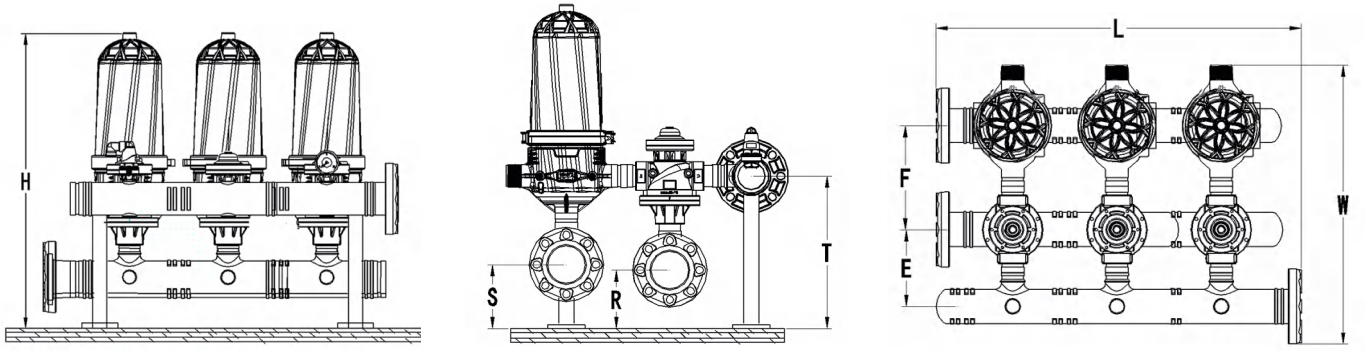

	MODEL	SPECIFICATIONS			DIMENSIONS (mm)							
		UNIT NO.	MANIFOLD	MAX FLOW m^3/h	L	H	T	R	S	W	E	F
2 inch unit	F202-3	2"x2	3"-80	50	710	880	405	155	170	800	205	280
	F202-4	2"x2	4"-100	50	710	930	450	210	220	830	215	290
	F203-3	2"x3	3"-80	75	985	880	405	155	170	800	205	280
	F203-4	2"x3	4"-100	75	985	930	450	210	220	830	215	290
	F204-4	2"x4	4"-100	100	1260	930	450	210	220	830	215	290
	F205-4	2"x5	4"-100	125	1535	930	450	210	220	830	215	290
3 inch unit	F302-4	3"x2	4"-100	64	710	1050	450	150	200	880	260	305
	F303-4	3"x3	4"-100	96	985	1050	450	150	200	880	260	305
	F304-6	3"x4	6"-150	128	1260	1120	520	220	230	910	290	305
	F305-6	3"x5	6"-150	160	1535	1120	520	220	230	910	290	305
	F305-8	3"x5	8"-200	160	1535	1180	580	250	260	960	320	305
	F306-6	3"x6	6"-150	192	1810	1120	520	220	230	910	290	305
	F306-8	3"x6	8"-200	192	1810	1180	580	250	260	960	320	305
	F307-6	3"x7	6"-150	224	2085	1120	520	220	230	910	290	305
	F307-8	3"x7	8"-200	224	2085	1180	580	250	260	960	320	305
	F308-8	3"x8	8"-200	256	2360	1180	580	250	260	960	320	305

H TYPE AUTO DISC FILTRATION SYSTEM

MANIFOLD:HDPE



FEATURE & ADVANTAGE

- Manufactured in high density polyethylene, resistance to chemical products, wear-resistant;
- Chip built-in controller to collect water pressure data, achieve unmanned automatic perform;
- Continuous filtering for water supply during back-flush;

- Multiple choices in HDPE material and metal material with the manifold
- Smart back-flush auto-procedure setting by the discrepancy of water pressure between inlet & outlet;
- Efficient water saving in auto-flushing with minimum pressure 2.8 bar and flow rate 5 L/s minimum.

MANIFOLD:304 Stainless Steel



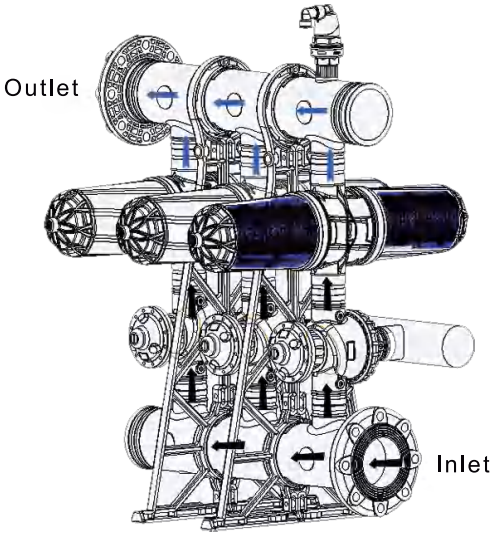

HOW IT WORKS

Filtration stage:

Under the command of the controller,the dirty water flow into the filters in filtration stage via the back-flushing control valves,then the Vortex and the disc keeps the particles in the groove of the discs, the clean water flow into the outlet manifold.

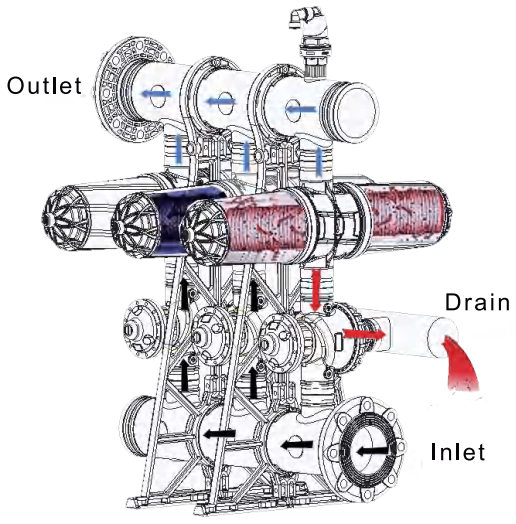

Backwashing stage:

Under the command of the controller,only one of filter starts back-flushing at a time.The back-flushing control valves change the water flow direction,then the filtered water is introduced in reverse through the filtering element which decompresses the stack of discs for the backwash procedure.The solids are expelled from the discs and discharged through the drain manifold.

SPECIFICATION

	3 INCH UINT			4 INCH UINT	
QUALITY OF WATER	MICRON / MESH	200 / 80	130 / 120	130 / 120	100 / 150
GOOD	m^3/h	50	40	64	48
AVERAGE	m^3/h	42	38	59	40
POOR	m^3/h	38	36	47	36
VERY POOR	m^3/h	26	28	28	24

BACKWASH PRESSURE

	200-130 micron 75-120 mesh	100 micron 150 mesh	50-20 micron
MIN BACKWASH PRESSURE	1.8 bar	2.5 bar	3 bar
	26 psi	36 psi	44 psi
MIN BACKWASH FLOW	2.5 l/s	3.1 l/s	3.3 l/s
	39 gpm	50 gpm	52 gpm

400 micron (40 mesh) | 200 micron (80 mesh) | 130 micron (120 mesh) | 100 micron (150 mesh) | 50 micron (200 mesh) | 20 micron (300 mesh)

HEAD LOSS

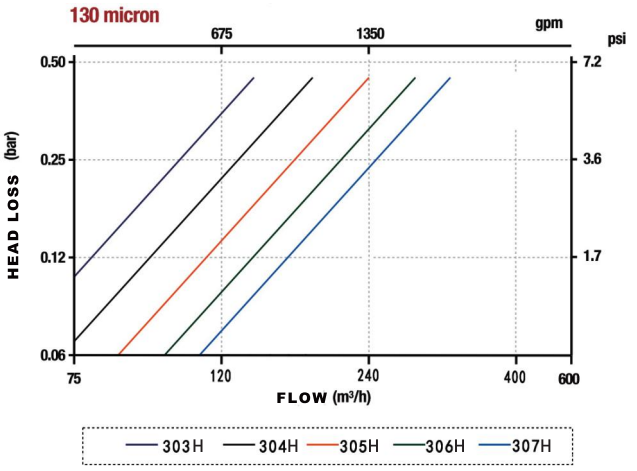

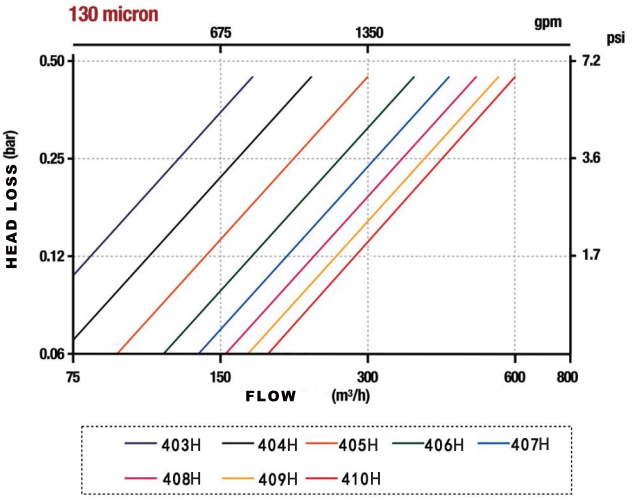

DIMENSION

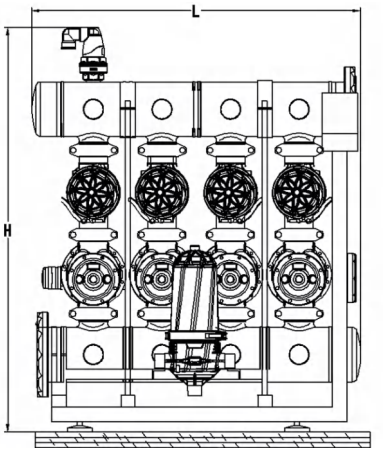

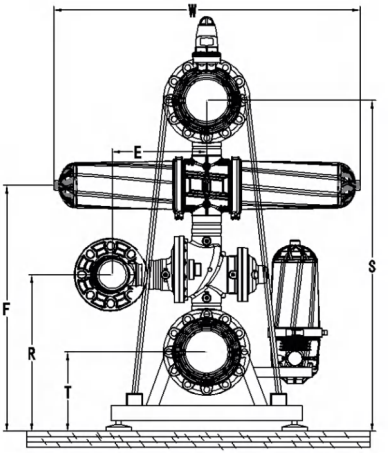

	MODEL	SPECIFICATIONS			DIMENSIONS (mm)							
		UNIT NO.	MANIFOLD	MAX FLOW m³/h	L	H	T	R	S	W	E	F
3 inch unit	F303H-4	3"x3	4"-100	120	985	1355	280	535	1135	980	350	840
	F303H-6	3"x3	6"-150	120	985	1430	280	560	1185	980	350	865
	F304H-6	3"x4	6"-150	160	1260	1430	280	560	1185	980	350	865
	F305H-6	3"x5	6"-150	200	1535	1430	280	560	1185	980	350	865
	F305H-8	3"x5	8"-200	200	1535	1520	280	590	1275	980	350	895
	F306H-8	3"x6	8"-200	240	1810	1520	280	590	1275	980	350	895
	F307H-8	3"x7	8"-200	280	2085	1520	280	590	1275	980	350	895
4 inch unit	F403H-6	4"x3	6"-150	192	985	1460	325	625	1250	1220	380	960
	F404H-6	4"x4	6"-150	256	1260	1460	325	625	1250	1220	380	960
	F404H-8	4"x4	8"-200	256	1260	1650	290	655	1310	1220	380	990
	F405H-6	4"x5	6"-150	320	1535	1460	290	625	1250	1220	380	960
	F405H-8	4"x5	8"-200	320	1535	1650	290	655	1310	1220	380	990
	F406H-8	4"x6	8"-200	384	1810	1650	290	655	1310	1220	380	990
	F406H-10	4"x6	10"-250	384	1810	1760	345	685	1400	1220	380	1020
	F407H-8	4"x7	12"-300	448	2085	1650	325	655	1310	1220	380	990
	F407H-10	4"x7	10"-250	448	2085	1760	345	685	1400	1220	380	1020
	F407H-12	4"x7	12"-300	448	2085	1870	400	705	1490	1220	380	1100
	F408H-10	4"x8	10"-250	512	2360	1760	345	685	1400	1220	380	1020
	F408H-12	4"x8	12"-300	512	2360	1870	400	705	1490	1220	380	1100
	F409H-10	4"x9	10"-250	576	2635	1760	345	685	1400	1220	380	1020
	F409H-12	4"x9	12"-300	576	2635	1870	400	705	1490	1220	380	1100
	F410H-10	4"x10	10"-250	640	2910	1760	345	685	1400	1220	380	1020
	F410H-12	4"x10	12"-300	640	2910	1870	400	705	1490	1220	380	1100

SAND MEDIA FILTRATION SYSTEM



FEATURE & ADVANTAGE

- High filtration rate, low pressure loss, large filtration water.
- The system filter unit has 16 (400mm) to 60 (1500mm) specifications, and various installation methods are available.
- Carbon steel material,good corrosion resistance,long service life.

- Automatic control of unattended.
- Continuous online automatic back-flush of dirt and impurities.
- The selected quartz sand or garnet as the filter medium, the minimum diameter of 0.16mm can be selected as the homogeneous filter material.

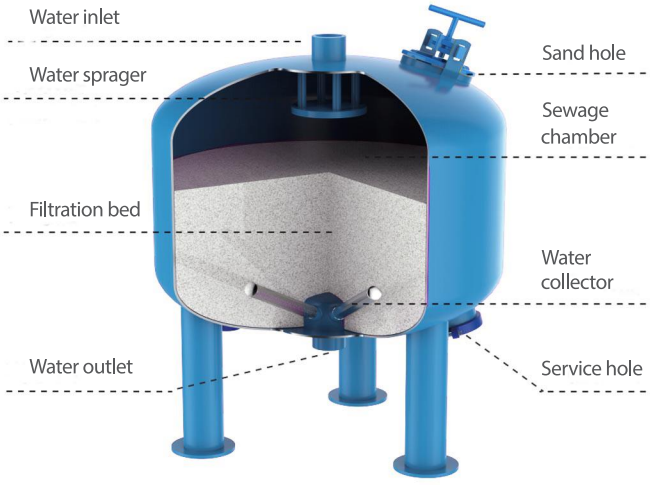

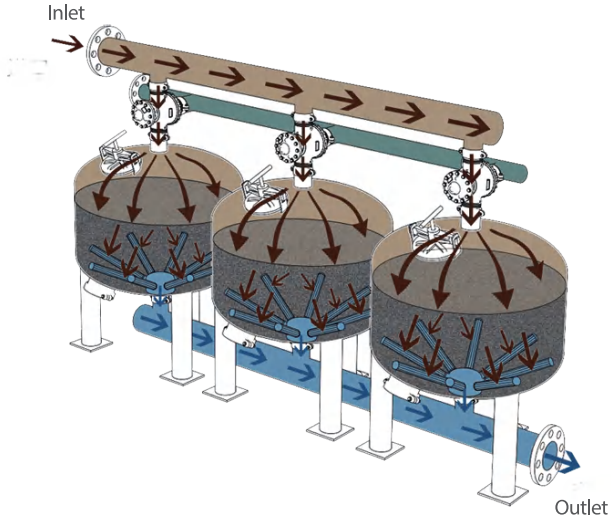

HOW IT WORKS

Filtration stage:

Raw water enters from the filter inlet and percolates through the filter bed. Suspended materials come into contact and attach to the media particles. Clean water flows through the filtration nozzles and out of the filter via the outlet valve.

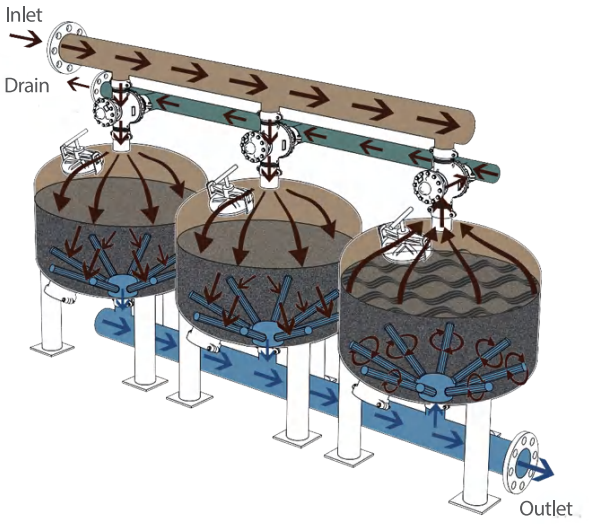

Backwashing stage:

Pressurized water flows in reverse direction – from the nozzles upwards, causing suspension of the filter bed, thus releasing the suspended matter from the bedding. The dirt particles are then washed out of the filter through the back-flush valve. In automatic media filters installations the cleaning process is done by the system's controller. When the pressure differential switch senses that the differential pressure across the system reached a pre-set value, a signal is sent to the flushing controller and the self cleaning process begins.

MODEL & SPECIFICATION

MODEL	VESSEL DIAMETER (mm)	VESSEL NO.	OUTLET INLET DIAMETER (mm)	MAX PRESSURE (bar)	FILTERING SURFACE (m^2)	DRAIN OULET DIAMETER (in)	BACKWASH FLOW (m^3/h)	FLOW RANGE (m^3/h)
F24-2	600	2	3”-80	10	0.6	3”-80	15	30-50
F28-2	700	2	3”-80	10	0.8	3”-80	20	50-70
F28-3	700	3	4”-100	10	1.2	3”-80	20	70-90
F32-2	800	2	4”-100	10	1.0	3”-80	25	60-80
F32-3	800	3	6”-150	10	1.5	3”-80	25	90-130
F36-2	900	2	4”-100	10	1.2	3”-80	35	90-100
F36-3	900	3	6”-150	10	1.8	3”-80	30	120-150
F40-2	1000	2	4”-100	10	1.6	3”-80	40	90-100
F40-3	1000	3	6”-150	10	2.4	3”-80	40	130-150
F48-2	1200	2	6”-150	10	2.2	4”-100	50	140-180
F48-3	1200	3	8”-200	10	3.3	4”-100	50	150-250
F48-4	1200	4	10”-273	10	4.4	4”-100	50	200-350

DIMENSION

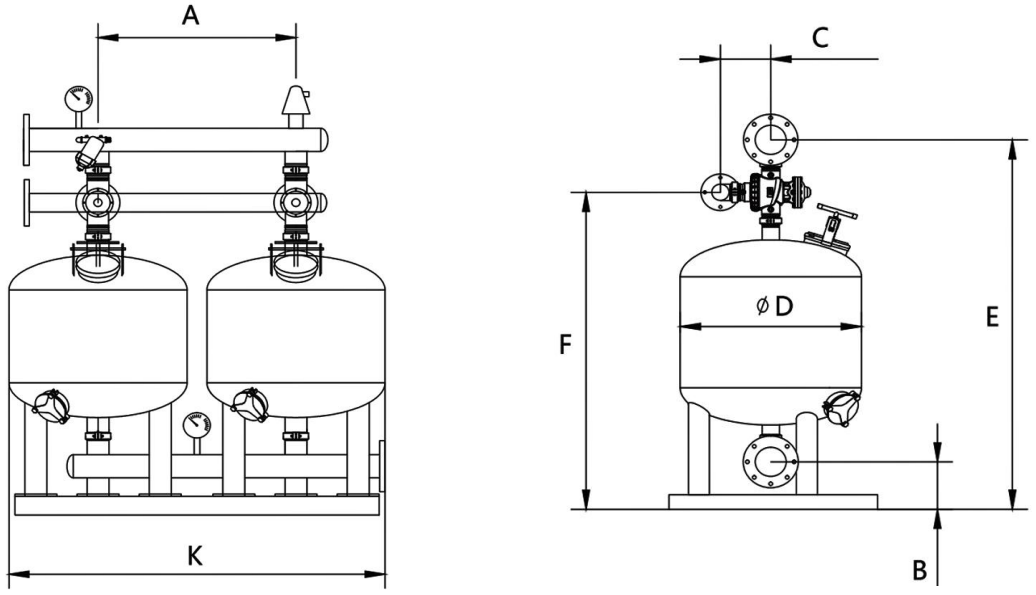

MODEL	D(mm)	A(mm)	B(mm)	C(mm)	E(mm)	F(mm)	K(mm)
F24-2	600	700	130	240	1450	1215	1330
F28-2	700	800	140	240	1580	1305	1520
F28-3	700	800	140	300	1580	1305	2320
F32-2	800	900	140	300	1620	1345	1720
F32-3	800	900	170	300	1695	1395	2620
F36-2	900	1000	140	300	1660	1385	1920
F36-3	900	1000	170	300	1740	1440	2920
F40-2	1000	1150	170	300	1785	1490	2120
F40-3	1000	1150	200	300	1900	1550	3220
F48-2	1200	1400	170	300	1925	1593	2620
F48-3	1200	1400	200	380	2005	1648	4020
F48-4	1200	1400	200	380	2025	1750	5420

PROJECT CASE





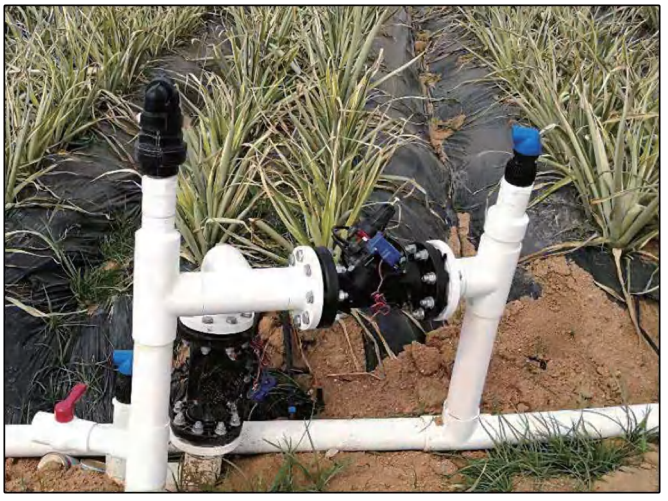







PROJECT CASE













PROJECT CASE













ARKA

www.arka.net.cn
www.china-arka.com
www.arka-irrigation.com

Fuzhou Arthas Fluid Equipment Technology CO.,Ltd

Address: No.258,Qixi,Hongkuan industry village,Yangxia Street,
Fuqing, Fuzhou, Fujian,China
Email: tina@arthasplastic.com
Tel: 0086-591-83598803
WhatsApp: +86 13055284768